sapling

Installation Manual V10.0

SAM Series 2-Wire and 3-Wire Clock

The Sapling Company, Inc.
670 Louis Drive
Warminster, PA 18974
USA

P. (+1) 215.322.6063
F. (+1) 215.322.8498
www.sapling-inc.com

Current as of November 2016

The Sapling Company, Inc.
670 Louis Drive
Warminster, PA 18974
USA

P. (+1) 215.322.6063
F. (+1) 215.322.8498
www.sapling-inc.com

SAM Series 2-Wire and 3-Wire Clocks

Table of Contents

Table of Contents 2

Important Safety Instructions 3

Identify Your Clock 4

Wall Mount Installation - Round Metal Clock 5 - 8

- Round SlimLine Clock 9 - 12
- Round Aluminium/Wood Clock 13 - 17
- Square Clock 18 - 21

Flag Mount Installation - Round Metal Clock 22 - 28

- Round SlimLine/Aluminum Clock 29 - 35
- Square Clock 36 - 41

Double Mount Installation - Round Metal Clock 42 - 46

- Round SlimLine/Aluminum Clock 47 - 52
- Square Clock 53 - 59

Wiring Information - 2-Wire Digital Communication 60

- 3-Wire Synchronous (Sync-Wire) Communication 115/230VAC 61
- 3-Wire Synchronous (Sync-Wire) Communication 24VAC 62

Frequently Asked Questions 63

Questions about Protocols 64

Troubleshooting 65

Diagnostic #1 - Protocol Verification 66 - 67

Diagnostic #2 - Comprehensive Test 68 - 69

Diagnostic #3 - Manufacturing Default 70 - 71

Warranty 72

The Sapling Company, Inc.
670 Louis Drive
Warminster, PA 18974
USA

P. (+1) 215.322.6063
F. (+1) 215.322.8498
www.sapling-inc.com

Important Safety Instructions

VERY IMPORTANT:

KNOW YOUR COMMUNICATION PROTOCOL

The SAM clock is designed to support the 2-Wire Digital Communication Protocol as well as 3-wire (sync-wire) communication protocols. To run either system properly, the clock requires the correct wiring format. It is very important that you only follow the wiring instructions appropriate to your clock's communication protocol. For example: if your system includes converter boxes which are only used for the 2-wire system, then you should only follow the instructions that relate to the 2-wire digital communication protocol wiring.

⚠ DANGER

SHOCK HAZARD

- Keep the electricity to this device turned OFF until the clock installation is complete.
- Do not expose the clock movement to water, or install the clock in a location where it may be exposed to water.

NOTICE

- Do not install the clock outdoors. Damage to the clock if placed outdoors voids the warranty.
- Do not hang objects from the clock or clock mounting parts. The clocks are not designed to support the weight of other objects.
- The clock face and housing may be cleaned with a damp cloth or disinfectant. Test other cleaning products on a small part of the clock housing before attempting to use on the rest of the clock. Avoid bleach and chemicals known to dissolve plastics.

⚠ WARNING

FIRE HAZARD

- Always follow your national and regional electrical codes or ordinances.
- The AC power circuit for the clock must be attached to a circuit breaker that can be reset by the user.

PHYSICAL INJURY HAZARD

- If you are standing on an object while installing your clock, make sure that the object can support your weight, and will not sway or move as you stand on it.
- Take precautions to avoid injury by potential safety hazards near the point of installation including (but not limited to) heavy machinery, sharp objects, hot surfaces, or exposed cables carrying an electric current.
- Follow all mounting instructions exactly as stated in this manual. Failure to do so may result in the device falling off the point of installation.
- Packaging materials and mounting items include plastic bags and small pieces, which pose a suffocation hazard to young children.

The Sapling Company, Inc.
670 Louis Drive
Warminster, PA 18974
USA

P. (+1) 215.322.6063
F. (+1) 215.322.8498
www.sapling-inc.com

Identify Your Clock

A label containing the part number of your clock is attached to the clock movement.

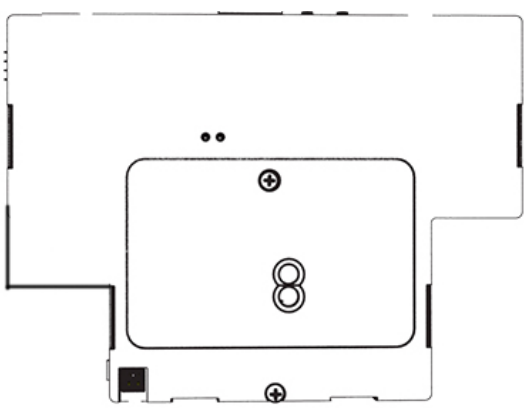

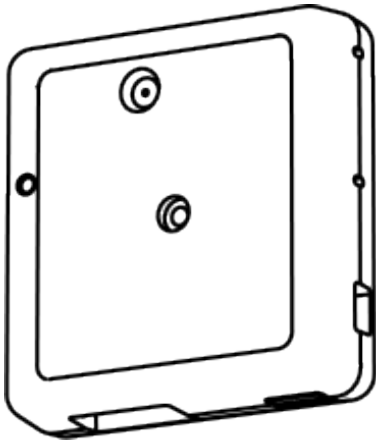

If your part number begins with SAM-1, you own a METAL clock

If your part number begins with SAM-4, you own a SLIMLINE or SQUARE clock

If your part number begins with SAM-5 you own an ALUMINUM clock

If your part number begins with SAM-6 you own a WOOD clock

Example part numbers:

SAM-1BS-16R-1	(METAL clock)
SAM-4BS-12S-4	(SQUARE clock)
SAM-4BS-12R-4	(SLIMLINE clock)
SAM-5AS-09R-1	(ALUMINUM clock)
SAM-6DS-12R-2	(WOOD clock)

Please note that METAL clocks may use either the movement shown on the left or the one shown on the right. Instructions and diagrams have been provided for both variants.

All SlimLine, Square, Aluminum, and Wood clocks use the movement shown on the left.

The Sapling Company, Inc.
670 Louis Drive
Warminster, PA 18974
USA

P. (+1) 215.322.6063
F. (+1) 215.322.8498
www.sapling-inc.com

Wall Mount Installation - Round Metal Clock

Included in Package

Description	Quantity	Picture
SAM round original analog clock	1	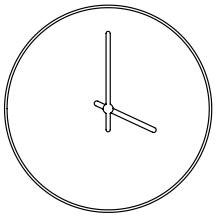
Mounting Bracket 12": M-MB-12-4 16": M-MB-16-2	1	

Included in Wiring Kit (A-PK-12-2A)

Power/grounding wires and connector	1	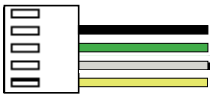
#6-32x1/2 screw	2	
M4-0.5x10	2	
#10x1.5 Self-tapping screw	1	
Wall anchor	1	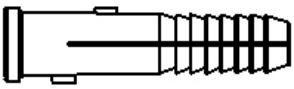
Additional grounding wire with connector	1	

PLEASE NOTE: A user will also have to provide a Phillips-head screwdriver, a small slot-head screwdriver, a drill with a 1/4 inch drill bit, a pencil, a single gang box, any equipment needed to install the gang box, and any additional wiring needed to extend the signal, power, or ground cables.

If any of the items listed in the wiring kit are missing, you may contact your dealer and order a replacement kit.

The Sapling Company, Inc.
670 Louis Drive
Warminster, PA 18974
USA

P. (+1) 215.322.6063
F. (+1) 215.322.8498
www.sapling-inc.com

Wall Mount Installation - Round Metal Clock

1) Install the single gang box in the wall. Leave at least 17 inches between the bottom of the gang box and ceiling. Confirm that the bottom of the gang box is level with the floor.

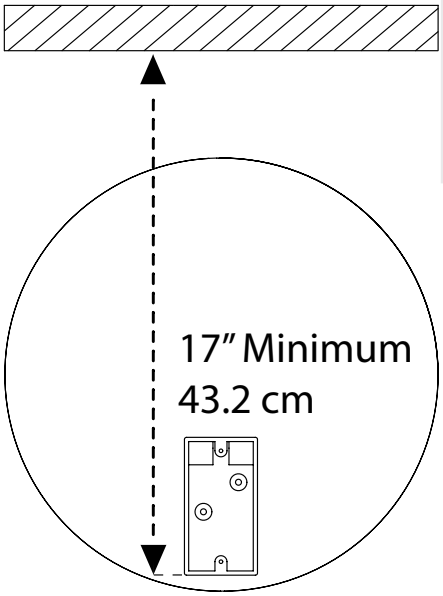

2) Run power and communication wiring to the gang box. See the sections of this manual labeled "Wiring Information" for additional details, depending on your system.

If you are using a 2-wire system, pull the YELLOW and GREEN wires out of the connector.

CHECK YOUR WIRING

The voltage between the white and black wires should measure 105-126 volts AC in the 115 volt model, 207-253 volts AC in the 230 volt model, or 21.5-26.5 volts AC in the 24 volt model.

If you are using the 24 volt model, make sure that the wiring leading to the clock is from an ISOLATED transformer.

3) Attach the communication, power, and grounding wires from your kit to the communication and power wires in the gang box. See the Wiring Guide included later in this manual for additional details.

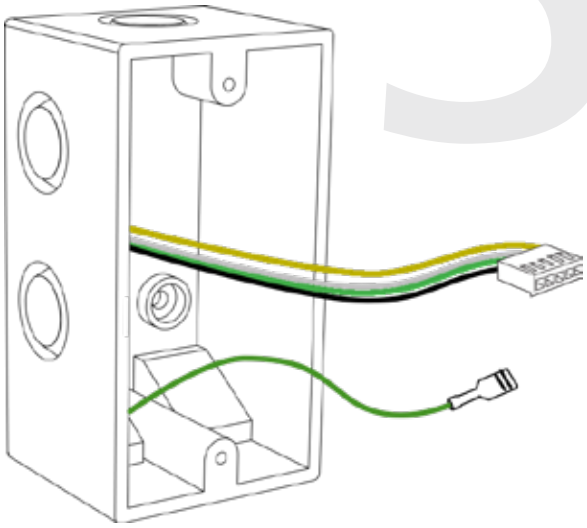

4) Use the #6-32x1/2 screws to attach the mounting bracket to the gang box. The gang box should be at the bottom of the mounting piece.

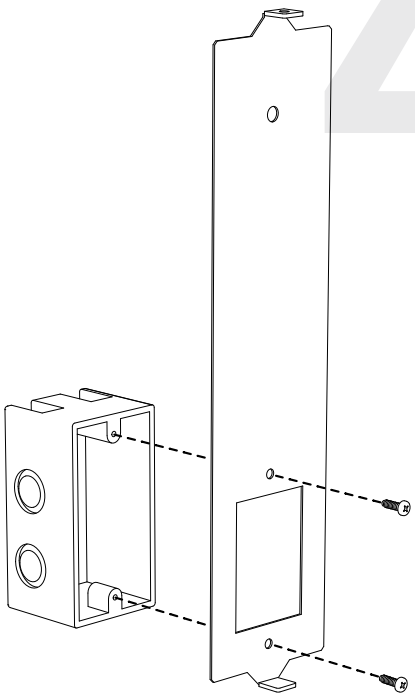

The Sapling Company, Inc.
670 Louis Drive
Warminster, PA 18974
USA

P. (+1) 215.322.6063
F. (+1) 215.322.8498
www.sapling-inc.com

Wall Mount Installation - Round Metal Clock

5) Use the pencil to mark the location of the large, circular hole at the top of the mounting bracket. Once finished, remove the mounting piece and drill a hole at the location you just marked.

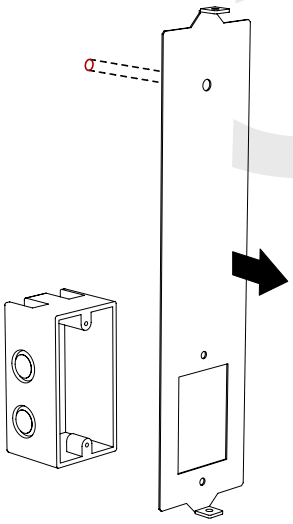

6) Insert the wall anchor into the hole, then reattach the mounting bracket. This time, also insert the #10x1.5 through the top of the mounting piece and into the wall anchor.

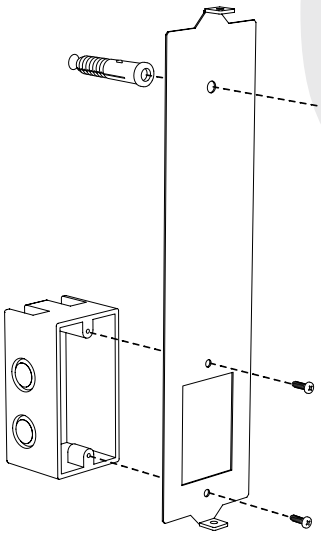

7) Attach the grounding wire to the grounding tab below and to the right of the clock movement.

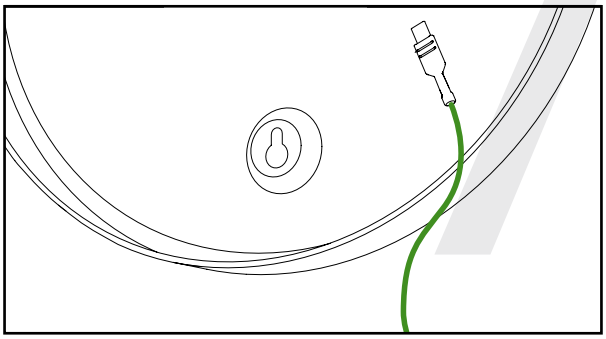

8) Remove the gearbox pin, then attach the Power connector to the port on the clock movement.

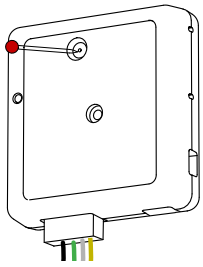

3-Wire Sync

Black Green White Yellow

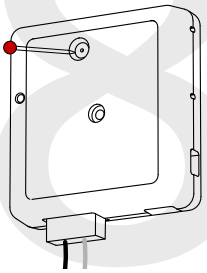

2-Wire Digital

Black White

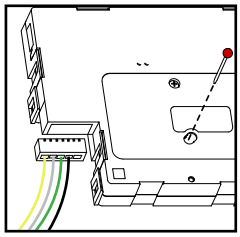

3-Wire Sync

Yellow White Green Black

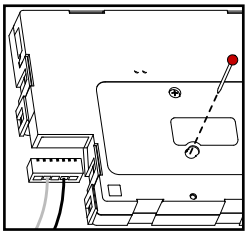

2-Wire Digital

White Black

The Sapling Company, Inc.
670 Louis Drive
Warminster, PA 18974
USA

P. (+1) 215.322.6063
F. (+1) 215.322.8498
www.sapling-inc.com

Wall Mount Installation - Round Metal Clock

9) Attach the clock to the mounting piece so that the hole at the top of the clock lines up with the hole at the top of the mounting piece, and the hole at the bottom of the clock lines up with the hole at the bottom of the mounting piece.

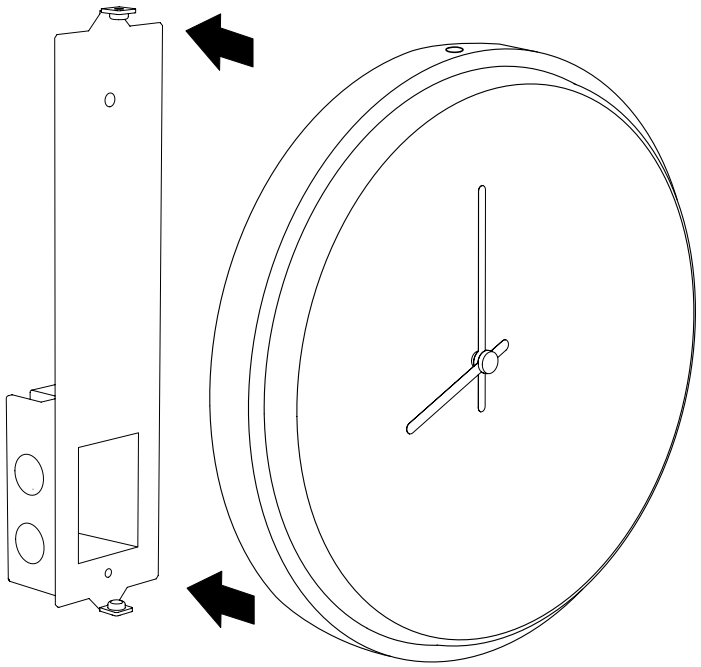

10) Use the two M4-0.5x10 screws to attach the clock to the mounting bracket. The screws should pass through the top and bottom holes on the clock, followed by the top and bottom holes of the mounting bracket.

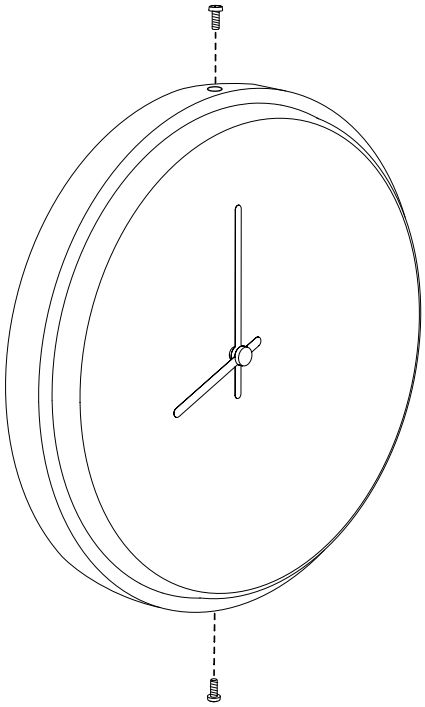

The Sapling Company, Inc.
670 Louis Drive
Warminster, PA 18974
USA

P. (+1) 215.322.6063
F. (+1) 215.322.8498
www.sapling-inc.com

Wall Mount Installation - Round SlimLine Clock

Included in Package

Description	Quantity	Picture
SAM round SlimLine analog clock	1	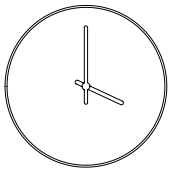

Included in Wiring Kit (A-SLM-MK-S-1)

Description	Quantity	Picture
Mounting Piece	1	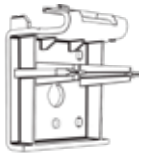
#6-19x7/16 screw	2	
Strain Relief	1	

Included in Gang Box Kit (A-GB-MK-1)

Description	Quantity	Picture
#6-32x1 screw	2	
#6-19x3/8 screw	1 (not used)	

Included in Wiring Kit (A-PK-SAM-1)

Description	Quantity	Picture
Power/grounding wires and connector	1	
#8x1.5 Self-tapping screw	2	
Wall anchor	2	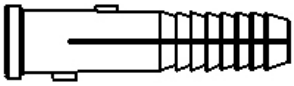

PLEASE NOTE: A user will also have to provide a Phillips-head screwdriver, a small flat-blade screwdriver, a single gang box, any equipment needed to install the gang box, and any additional wiring needed to extend the signal, power, or ground cables. You may also need a 1/4 inch drill if you decide not to attach the clock directly to the gang box.

If any of the items listed in the wiring kit are missing, you may contact your dealer and order a replacement kit.

The Sapling Company, Inc.
670 Louis Drive
Warminster, PA 18974
USA

P. (+1) 215.322.6063
F. (+1) 215.322.8498
www.sapling-inc.com

Wall Mount Installation - Round SlimLine Clock

1) If you are installing a new gang box in the wall, leave at least 4 inches between the top of the gang box and ceiling. Confirm that the bottom of the gang box is level with the floor.

If you are using an existing gang box, the top of the gang box must be a minimum of four inches away from the ceiling.

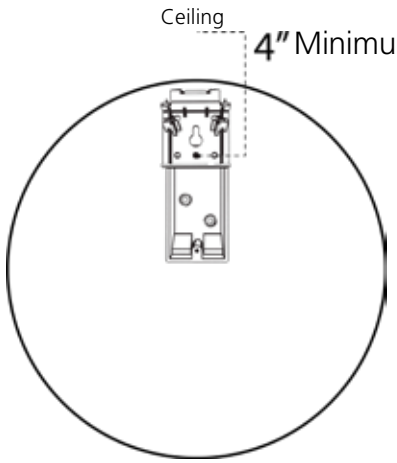

2) Run power and communication wiring to the gang box. See the sections of this manual labeled "Wiring Information" for additional details, depending on your system.

If you are using a 2-wire system, pull the YELLOW and GREEN wires out of the connector.

CHECK YOUR WIRING

The voltage between the white and black wires should measure 105-126 volts AC in the 115 volt model, 207-253 volts AC in the 230 volt model, or 21.5-26.5 volts AC in the 24 volt model.

If you are using the 24 volt model, make sure that the wiring leading to the clock is from an ISOLATED transformer.

3) Attach the communication and power wires from your kit to the communication and power wires in the gang box. See the sections of this manual labeled "3-Wire Synchronous (Sync-Wire) Communication Wiring Information" or "2-Wire Digital Communication Wiring Information" for additional details, depending on your system.

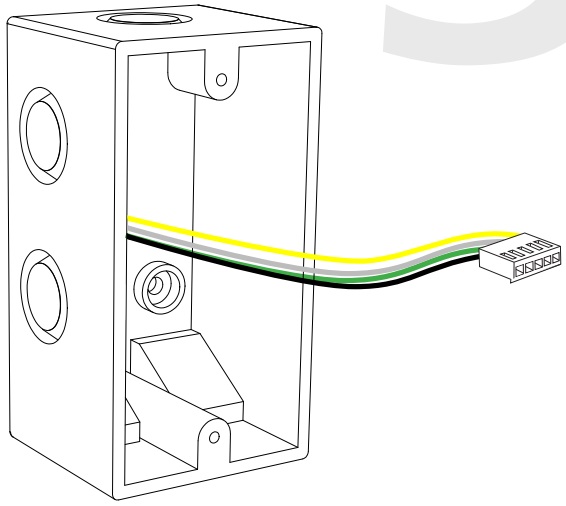

4) If you do not wish to attach the mounting piece to the gang box, proceed to step 5A. Otherwise, go to step 6.

The Sapling Company, Inc.
670 Louis Drive
Warminster, PA 18974
USA

P. (+1) 215.322.6063
F. (+1) 215.322.8498
www.sapling-inc.com

Wall Mount Installation - Round SlimLine Clock

5A) If you do not wish to attach the mounting piece to a gang box, place the mounting piece on the wall. Leave at least 4 inches between the middle of the mounting piece and ceiling. Confirm that the bottom of the mounting piece is level with the floor.

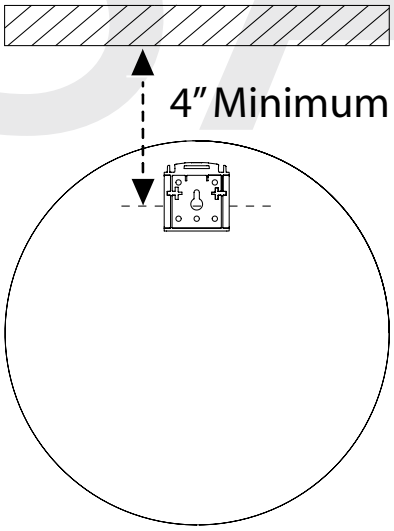

5B) Use a pencil to mark the positions of the top two holes, then use the 1/4 inch drill bit to drill holes at the locations of the two marks.

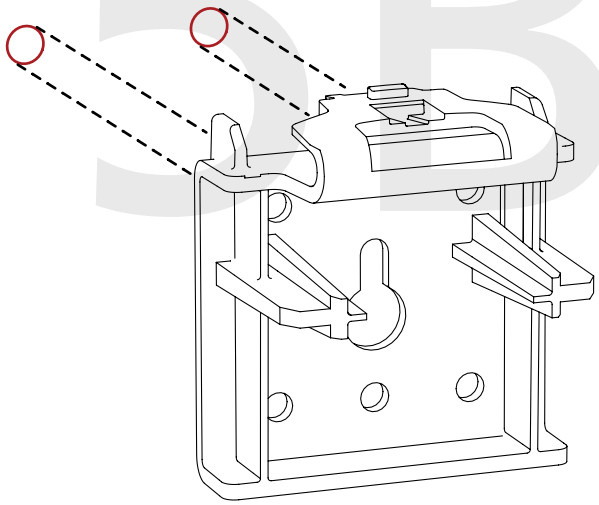

5C) Insert the wall anchors into the two holes, then place the two self tapping screws through the mounting piece and into the wall anchors. Skip step 6 and go directly to step 7.

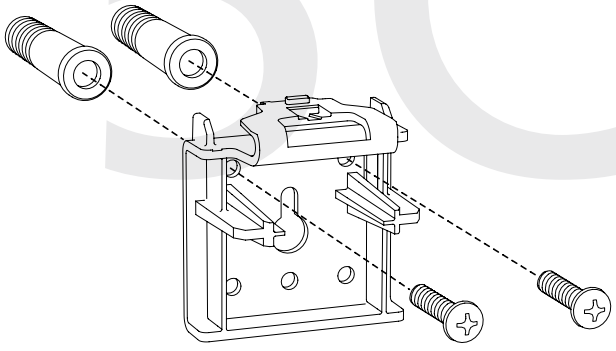

6) Place the mounting piece on the wall above the gang box so that the bottom centered hole on the piece overlaps the top hole on the gang box. Insert a #6-32x1 screw through the bottom centered hole and into the top hole of the gang box.

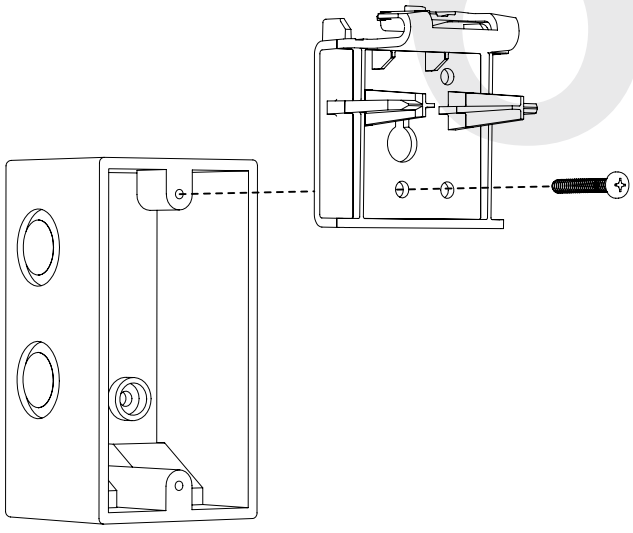

The Sapling Company, Inc.
670 Louis Drive
Warminster, PA 18974
USA

P. (+1) 215.322.6063
F. (+1) 215.322.8498
www.sapling-inc.com

Wall Mount Installation - Round SlimLine Clock

7) **Remove the gearbox pin**, then attach the power connector to the port on the movement.

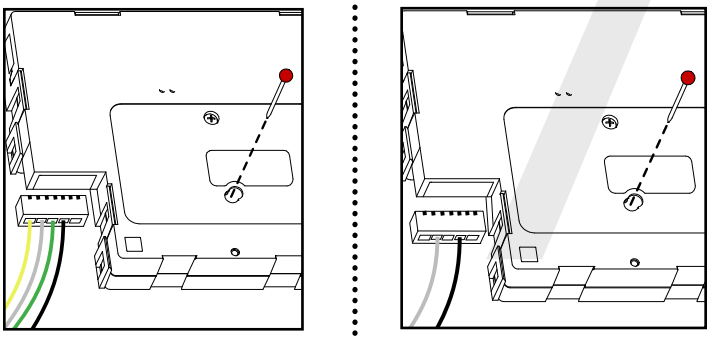

3-Wire Sync

Yellow White Green Black

2-Wire Digital

White Black

8) Lay any excess wiring across the strain relief base, then attach the strain relief to the clock with the two #6-19x7/16 screws. The strain relief should be tight enough to prevent the wire from sliding.

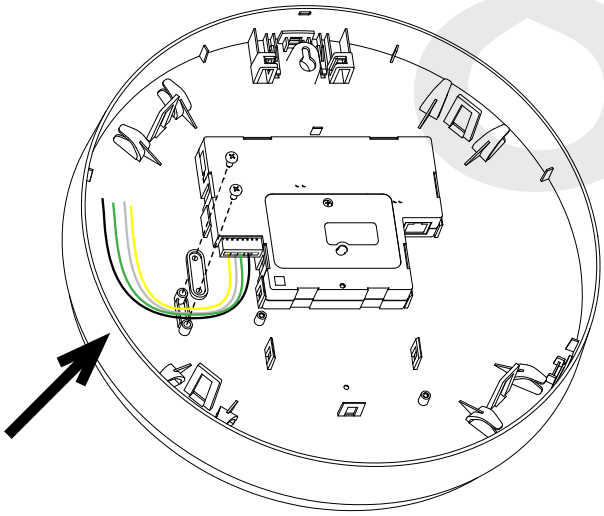

9) Attach the clock to the mounting piece by sliding the clock back onto it. You should hear a snapping noise as the latch engages.

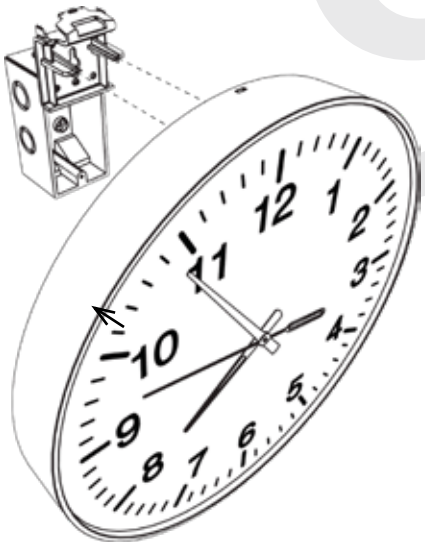

10) If you need to take the clock off the wall after the installation has been completed, use a flat-blade screwdriver or eyeglasses screwdriver to press down on and release the mounting piece latch, then slide the clock off the mounting piece.

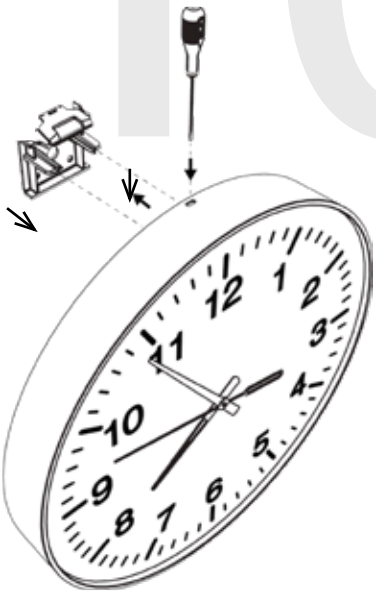

The Sapling Company, Inc.
670 Louis Drive
Warminster, PA 18974
USA

P. (+1) 215.322.6063
F. (+1) 215.322.8498
www.sapling-inc.com

Wall Mount Installation - Round Aluminium or Wood Clock

Included in Package

Description	Quantity	Picture
SAM round SlimLine analog clock with aluminium/wood rim	1	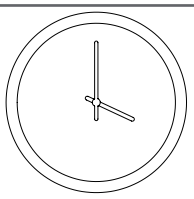

Included in Mounting Kit (A-SLM-MK-AW)

Mounting Piece	1	
Release lever	1	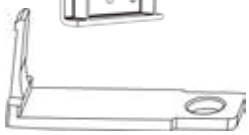
#6-19x7/16 screw	2	
Strain Relief	1	

Included in Wiring Kit (A-PK-SAM-1)

Power/grounding wires and connector	1	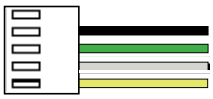
#8x1.5 Self-tapping screw	2	
Wall anchor	2	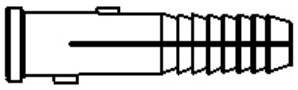

Included in Gang Box Kit (A-GB-MK-1)

#6-32x1 screw	2	
#6-19x3/8 screw	1 (not used)	

PLEASE NOTE: A user will also have to provide a Phillips-head screwdriver, a small flat-blade screwdriver, a drill with a 1/4 inch drill bit, a pencil, a single gang box, any equipment needed to install the gang box, and any additional wiring needed to extend the signal, power, or ground cables.

If any of the items listed in the wiring kit are missing, you may contact your dealer and order a replacement kit.

The Sapling Company, Inc.
670 Louis Drive
Warminster, PA 18974
USA

P. (+1) 215.322.6063
F. (+1) 215.322.8498
www.sapling-inc.com

Wall Mount Installation - Round Aluminium or Wood Clock

1) Install the single gang box in the wall. Leave at least 4 inches between the top of the gang box and ceiling. Confirm that the bottom of the gang box is level with the floor.

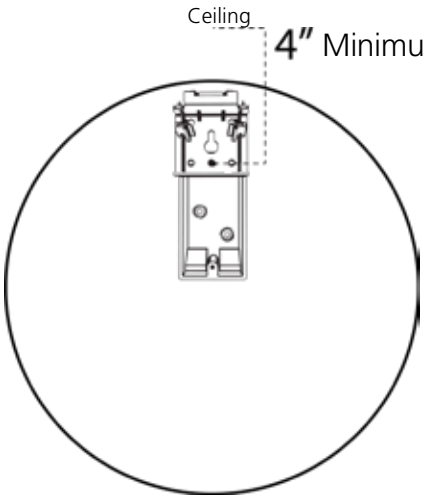

2) Run power and communication wiring to the gang box. See the sections of this manual labeled "Wiring Information" for additional details, depending on your system.

If you are using a 2-wire system, pull the YELLOW and GREEN wires out of the connector.

CHECK YOUR WIRING

The voltage between the white and black wires should measure 105-126 volts AC in the 115 volt model, 207-253 volts AC in the 230 volt model, or 21.5-26.5 volts AC in the 24 volt model.

If you are using the 24 volt model, make sure that the wiring leading to the clock is from an ISOLATED transformer.

3) Attach the communication and power wires from your kit to the communication and power wires in the gang box. See the sections of this manual labeled "3-Wire Synchronous (Sync-Wire) Communication Wiring Information" or "2-Wire Digital Communication Wiring Information" for additional details, depending on your system.

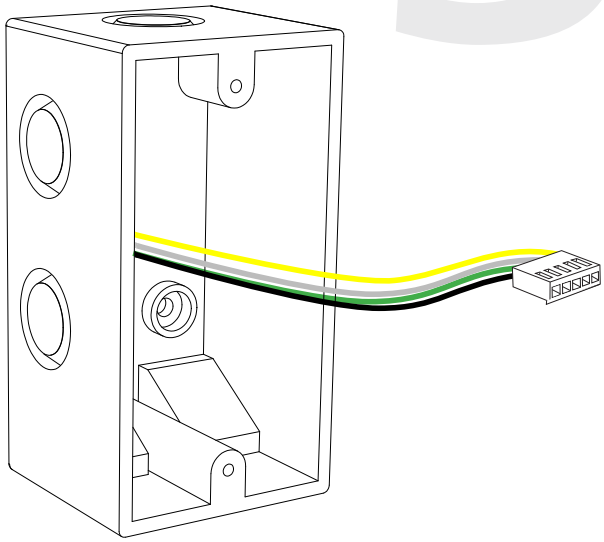

4) Insert the release lever into the hole atop the mounting piece latch.

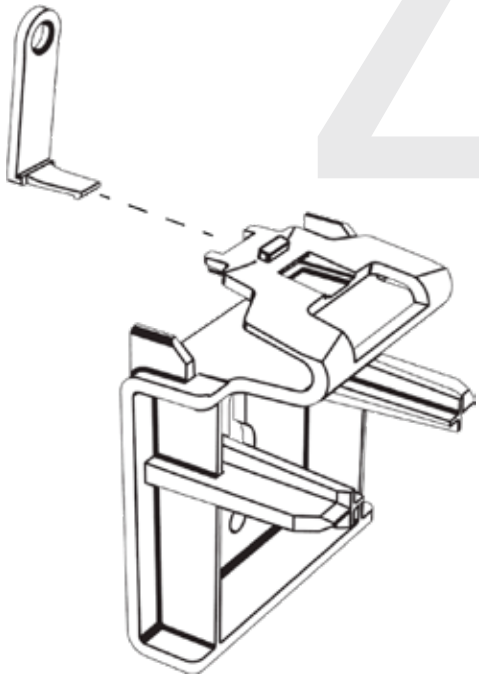

The Sapling Company, Inc.
670 Louis Drive
Warminster, PA 18974
USA

P. (+1) 215.322.6063
F. (+1) 215.322.8498
www.sapling-inc.com

Wall Mount Installation - Round Aluminium or Wood Clock

5) If you do not wish to attach the mounting piece to the gang box, proceed to step 6A. Otherwise, go to step 7.

6A) If you do not wish to attach the mounting piece to a gang box, place the mounting piece on the wall. Leave at least 4 inches between the middle of the mounting piece and ceiling. Confirm that the bottom of the mounting piece is level with the floor.

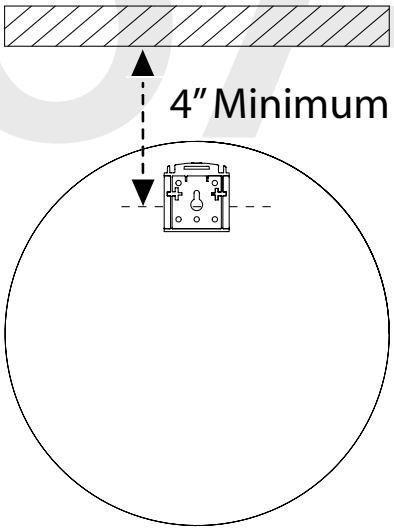

6B) Use a pencil to mark the positions of the top two holes, then use the 1/4 inch drill bit to drill holes at the locations of the two marks.

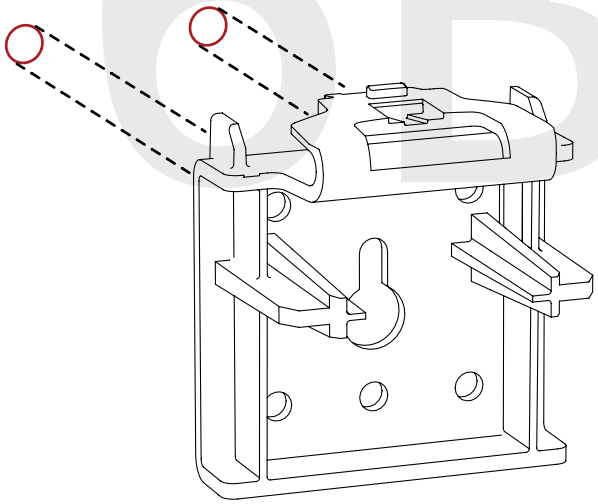

6C) Insert the wall anchors into the two holes, then place the two self tapping screws through the mounting piece and into the wall anchors. Skip step 7 and go directly to step 8.

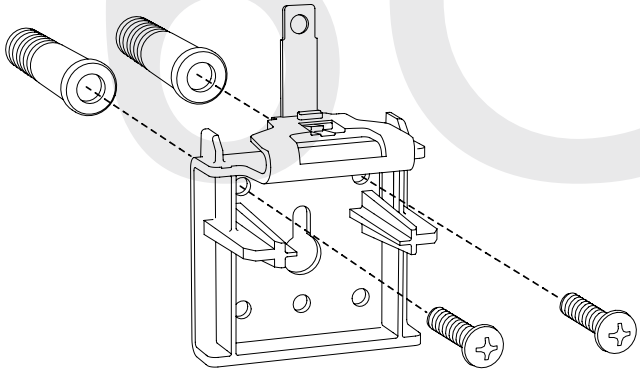

The Sapling Company, Inc.
670 Louis Drive
Warminster, PA 18974
USA

P. (+1) 215.322.6063
F. (+1) 215.322.8498
www.sapling-inc.com

Wall Mount Installation - Round Aluminium or Wood Clock

7) Place the mounting piece on the wall above the gang box so that the bottom centered hole on the piece overlaps the top hole on the gang box. Insert a #6-32x1 screw through the bottom centered hole and into the top hole of the gang box.

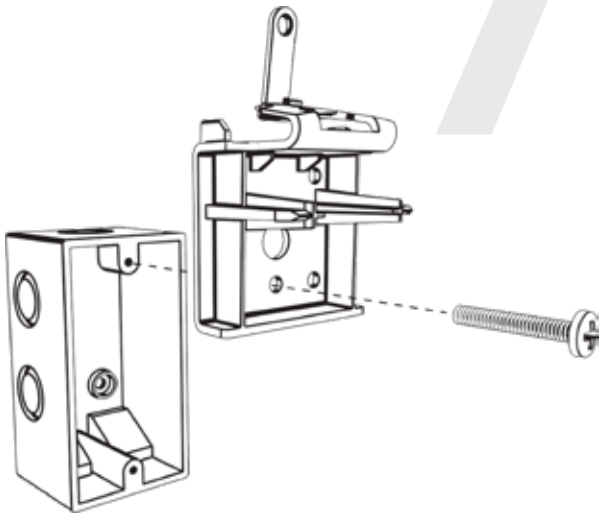

8) Temporarily attach the clock to the mounting piece (see step 9), use the pencil to mark the location of the hole at the top of the release lever, and remove the clock again (see step 11). Remove the mounting piece and make a hole at the location you just marked with the 1/8 inch drill bit. When finished, reattach the mounting piece.

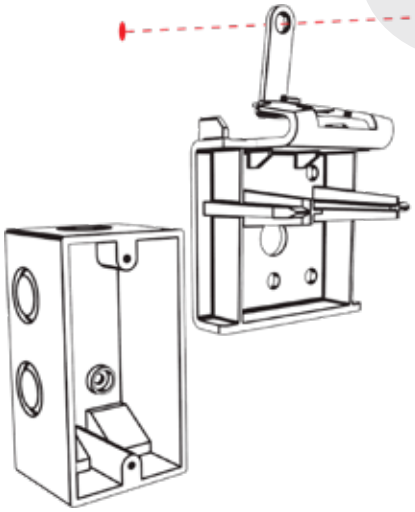

9) **Remove the gearbox pin**, then attach the power connector to the port on the movement.

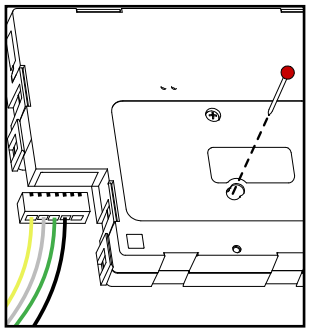

3-Wire Sync

Yellow
White
Green
Black

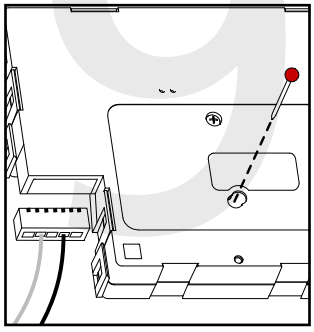

2-Wire Digital

White
Black

10) Lay any excess wiring across the strain relief base, then attach the strain relief to the clock with the two #6-19x7/16 screws. The strain relief should be tight enough to prevent the wire from sliding.

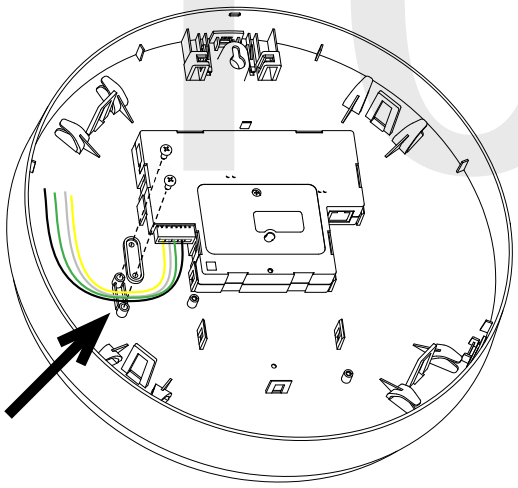

The Sapling Company, Inc.
670 Louis Drive
Warminster, PA 18974
USA

P. (+1) 215.322.6063
F. (+1) 215.322.8498
www.sapling-inc.com

Wall Mount Installation - Round Aluminium or Wood Clock

11) Attach the clock to the mounting piece by sliding the clock back onto it. You should hear a snapping noise as the latch engages.

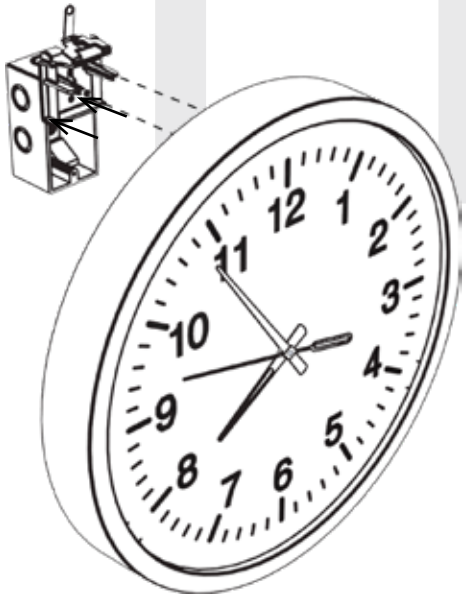

12) Place one of the self-tapping screws through the hole in the top of the release lever.

13) If you need to take the clock off the wall after the installation has been completed, remove the screw from the release lever, press the release lever down, then slide the clock off the mounting piece.

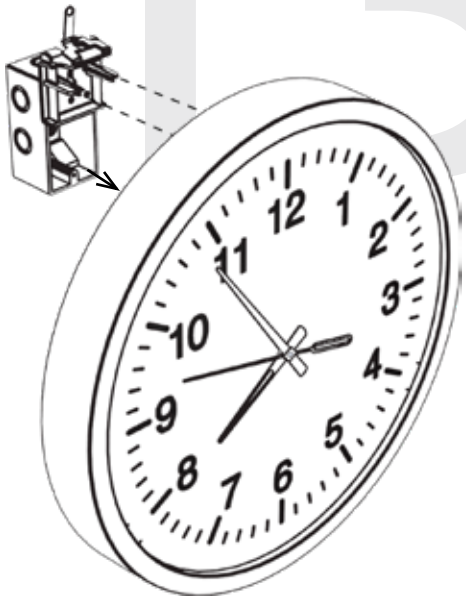

14) If you need to take the clock off the wall after the installation has been completed AND you accidentally broke off the release lever or forgot to attach it during installation, take a thin flathead screwdriver, thin ruler, or eyeglass screwdriver and insert the end between the clock and the wall. Press down on the latch until you are able to slide the clock off the mounting piece.

The Sapling Company, Inc.
670 Louis Drive
Warminster, PA 18974
USA

P. (+1) 215.322.6063
F. (+1) 215.322.8498
www.sapling-inc.com

Wall Mount Installation - Square Clock

Included in Package

Description	Quantity	Picture
SAM square analog clock	1	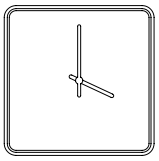
Mounting Piece (already attached to clock housing)	1	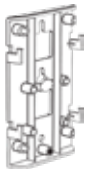

Included in Wiring Kit (A-PK-SAM-1)

Power/grounding wires and connector	1	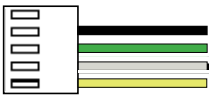
#8x1.5 Self-tapping screw	2 (not used)	
Wall anchor	2 (not used)	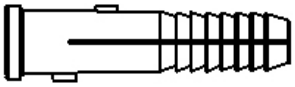

Included in Gang Box Kit (A-GB-MK-1)

#6-32x1 screw	2	
#6-19x3/8 screw	1	

PLEASE NOTE: A user will also have to provide a Phillips-head screwdriver, a small flat-blade screwdriver, a single gang box, any equipment needed to install the gang box, and any additional wiring needed to extend the signal, power, or ground cables.

If any of the items listed in the wiring kit are missing, you may contact your dealer and order a replacement kit.

The Sapling Company, Inc.
670 Louis Drive
Warminster, PA 18974
USA

P. (+1) 215.322.6063
F. (+1) 215.322.8498
www.sapling-inc.com

Wall Mount Installation - Square Clock

1) Install the single gang box in the wall. Leave at least 4 inches between the top of the gang box and ceiling. Confirm that the bottom of the gang box is level with the floor.

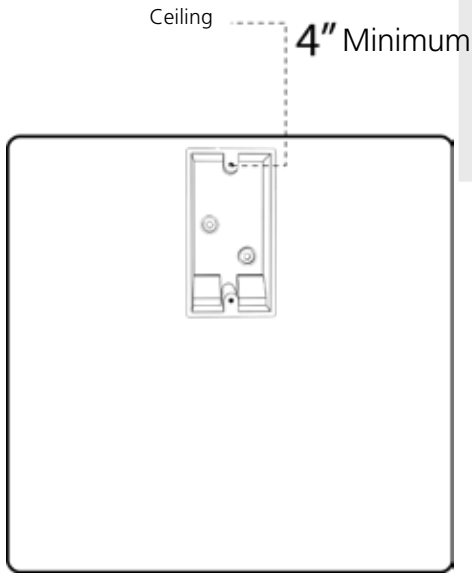

2) Run power and communication wiring to the gang box. See the sections of this manual labeled "Wiring Information" for additional details, depending on your system.

If you are using a 2-wire system, pull the YELLOW and GREEN wires out of the connector.

CHECK YOUR WIRING

The voltage between the white and black wires should measure 105-126 volts AC in the 115 volt model, 207-253 volts AC in the 230 volt model, or 21.5-26.5 volts AC in the 24 volt model.

If you are using the 24 volt model, make sure that the wiring leading to the clock is from an ISOLATED transformer.

3) Detach the housing from the back of the clock. Do this by inserting a flat-blade screwdriver about 1/8 inch into each of the slot holes until the housing detaches. You may hear a snapping noise as the latches disengage.

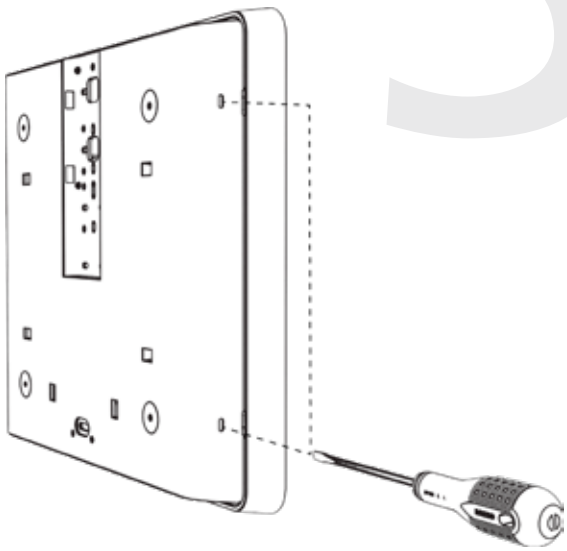

4) Release the mounting piece from the back of the housing by sliding it towards the center of the housing, then pulling it back and away from the housing.

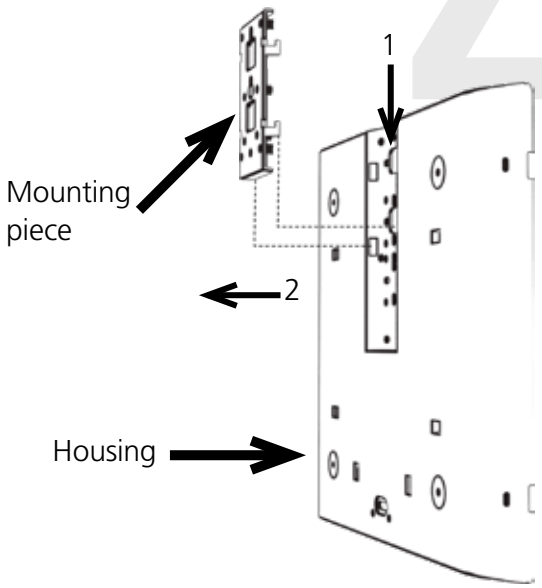

The Sapling Company, Inc.
670 Louis Drive
Warminster, PA 18974
USA

P. (+1) 215.322.6063
F. (+1) 215.322.8498
www.sapling-inc.com

Wall Mount Installation - Square Clock

5) Thread the power wires from your kit through the hole at the top of the housing followed by the mounting piece, then attach them to the wires in the gang box. See the sections of this manual labeled "3-Wire Synchronous (Sync-Wire) Communication Wiring Information" or "2-Wire Digital Communication Wiring Information" for additional details, depending on your system.

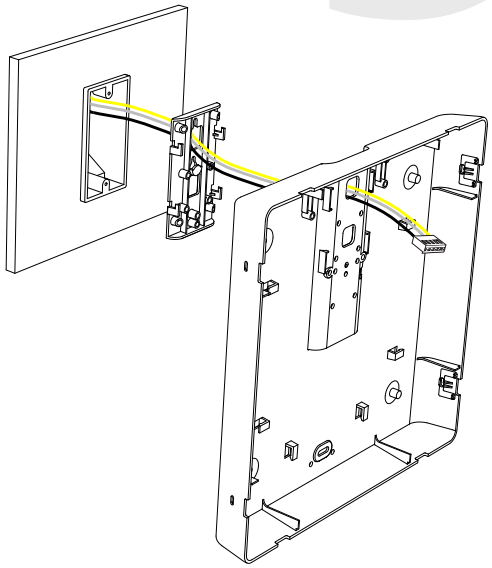

6) Attach the mounting piece to the gang box using both of the #6-32x1 screws and a Phillips-head screwdriver.

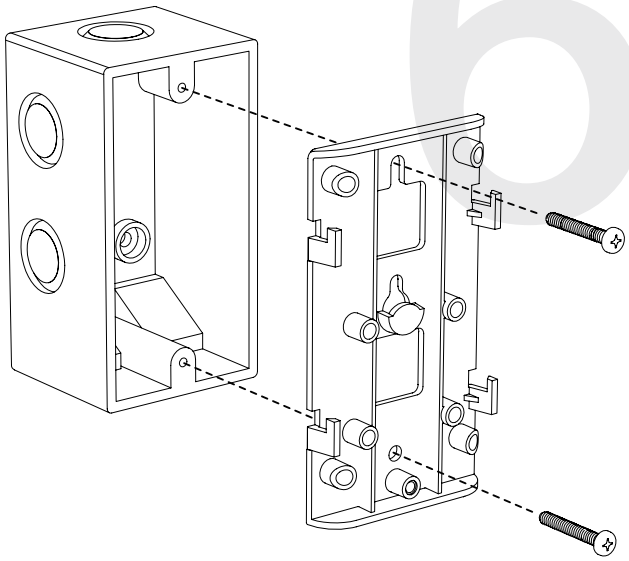

7) Slide the clock housing onto the mounting piece. If the housing does not slide on properly, tighten the screws that attach the mounting piece to the gang box.

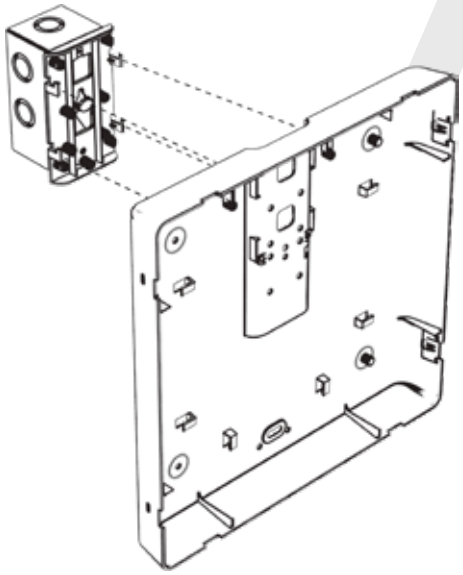

8) If you wish to prevent the clock from sliding off the mounting piece, use the small, silver 6-19x3/8 screw on the bottom centered hole. Once the screw is in place, test it by attempting to slide the housing up. The housing should not move.

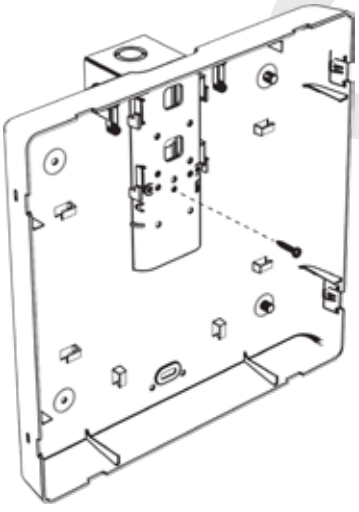

The Sapling Company, Inc.
670 Louis Drive
Warminster, PA 18974
USA

P. (+1) 215.322.6063
F. (+1) 215.322.8498
www.sapling-inc.com

Wall Mount Installation - Square Clock

9) **Remove the gearbox pin**, then attach the power connector to the port on the movement.

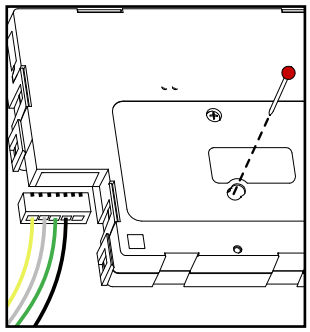

3-Wire Sync

Yellow White Green Black

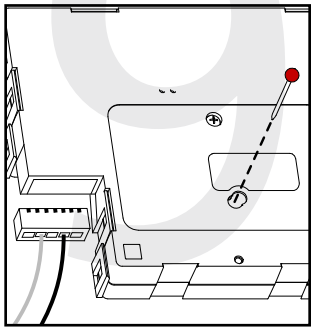

2-Wire Digital

White Black

10) Loosen the strain relief by unscrewing the two screws. Slip any excess wiring through it, then tighten the strain relief by reinserting and tightening the screws.

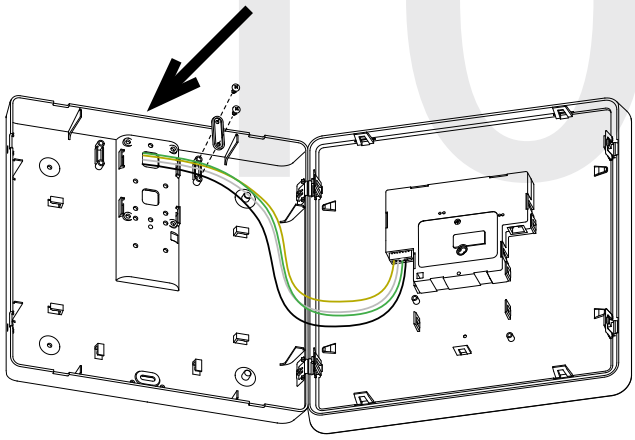

11) Slide the clock back into the housing. You should hear a snapping noise as the latches reengage.

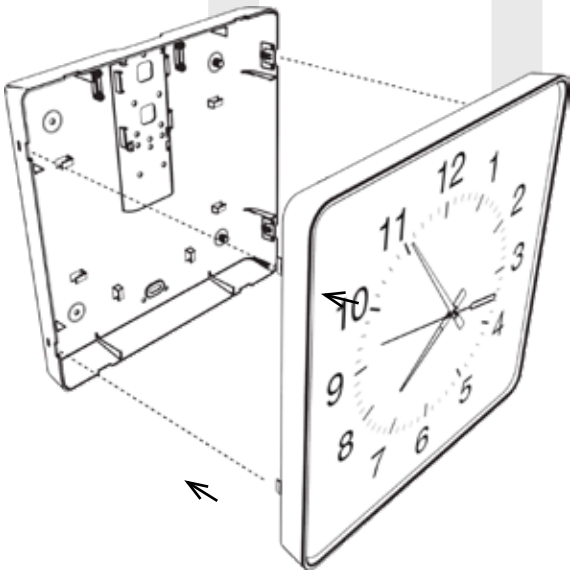

12) If you feel the need to take the clock off the wall after the installation has been completed, use a flat-blade screwdriver to detach the housing from the back of the clock, then use a Phillip's-head screwdriver to detach the mounting piece from the housing and gang box.

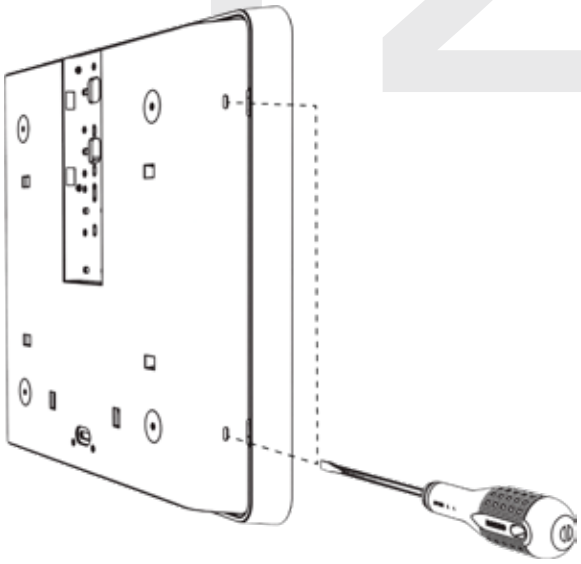

The Sapling Company, Inc.
670 Louis Drive
Warminster, PA 18974
USA

P. (+1) 215.322.6063
F. (+1) 215.322.8498
www.sapling-inc.com

Flag Mount Installation - Round Metal Clock

Included in Package

Description	Quantity	Picture
SAM square analog clock	1	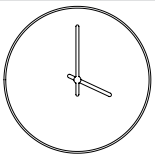
Mounting Bracket	1 (not used)	

Included in Wiring Kit (A-PK-12-2A)

Power/grounding wires and connector	1	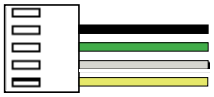
#6-32x1/2 screw	2 (not used)	
M4-0.5x10	2 (not used)	
#8x1.5 Self-tapping screw	1 (not used)	
Wall anchor	1 (not used)	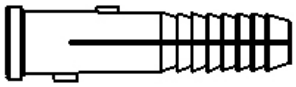
Additional grounding wire with connector	1	

Continued on next page

If any of the items listed in the kits are missing, you may contact your dealer and order a replacement kit.

The Sapling Company, Inc.
670 Louis Drive
Warminster, PA 18974
USA

P. (+1) 215.322.6063
F. (+1) 215.322.8498
www.sapling-inc.com

Flag Mount Installation - Round Metal Clock

Included in Adapter Kit (A-MOUNT-12S-2) or (A-MOUNT-16S-2)

or (A-MTL-MOUNT-12S-2) or (A-MTL-MOUNT-16S-2)

Description	Quantity	Picture
Round Clock Adapter	1	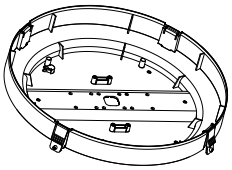
Internal-tooth washer	4	
#8-32x7/16 screw	4	

Included in Pole Kit (SAB-1BD-00S-0)

Dual-mount pole, including mounting plate	1	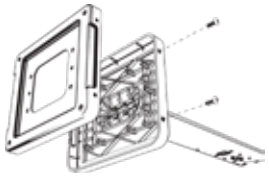
#10-32x3/8 green screw	1	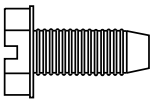

PLEASE NOTE: A user will also have to provide a Phillips-head screwdriver, a small slot-head screwdriver, a drill with a 1/4 inch drill bit, a pencil, a double gang box, Four wall anchors that can support 50 lbs and a maximum screw size of 10x1.5", four #8 screws for the wall anchors, four #6-32x1 screws for attaching the mounting plate to the gang box, any equipment needed to install the gang box, and any additional wiring needed to extend the signal, power, or ground cables.

If any of the items listed in the kits are missing, you may contact your dealer and order a replacement kit.

The Sapling Company, Inc.
670 Louis Drive
Warminster, PA 18974
USA

P. (+1) 215.322.6063
F. (+1) 215.322.8498
www.sapling-inc.com

Flag Mount Installation - Round Metal Clock

1) Install the double gang box in the wall or ceiling. If you are installing the gang box in the wall, leave at least eleven inches between the top of the gang box and the ceiling. If you are installing the gang box in the ceiling, leave at least eleven inches between the gang box and the wall.

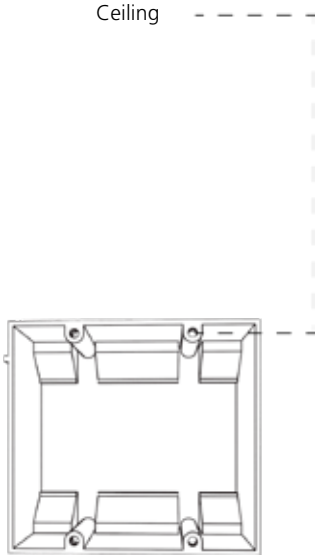

2) Run power and communication wiring to the gang box. See the sections of this manual labeled "Wiring Information" for additional details, depending on your system.

If you are using a 2-wire system, pull the YELLOW and GREEN wires out of the connector.

CHECK YOUR WIRING

The voltage between the white and black wires should measure 105-126 volts AC in the 115 volt model, 207-253 volts AC in the 230 volt model, or 21.5-26.5 volts AC in the 24 volt model.

If you are using the 24 volt model, make sure that the wiring leading to the clock is from an ISOLATED transformer.

3) Detach the mounting plate from the mounting pole by unscrewing the two screws. Set the screws and pole aside for later.

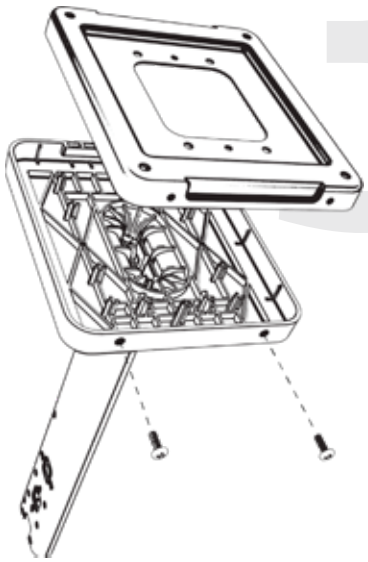

4) Attach the mounting plate to the gang box using only two of the four long silver #6-32x1 screws. With the mounting plate as a guide, use the pencil to trace the locations of the four larger holes at the outer corners.

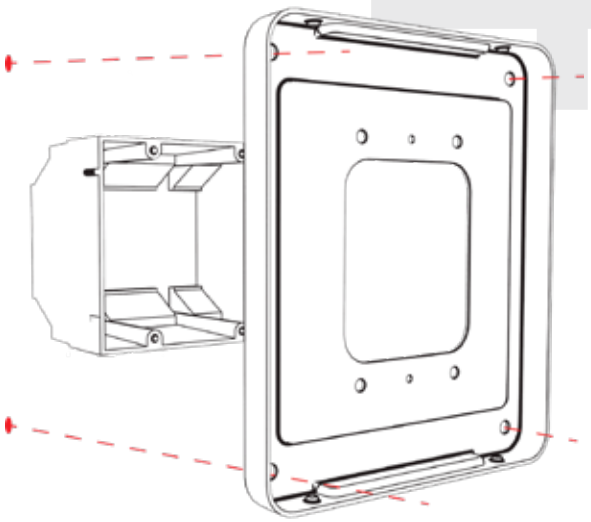

The Sapling Company, Inc.
670 Louis Drive
Warminster, PA 18974
USA

P. (+1) 215.322.6063
F. (+1) 215.322.8498
www.sapling-inc.com

Flag Mount Installation - Round Metal Clock

5) Remove the mounting plate and drill the four holes that were just traced. Insert the four wall anchors into the holes.

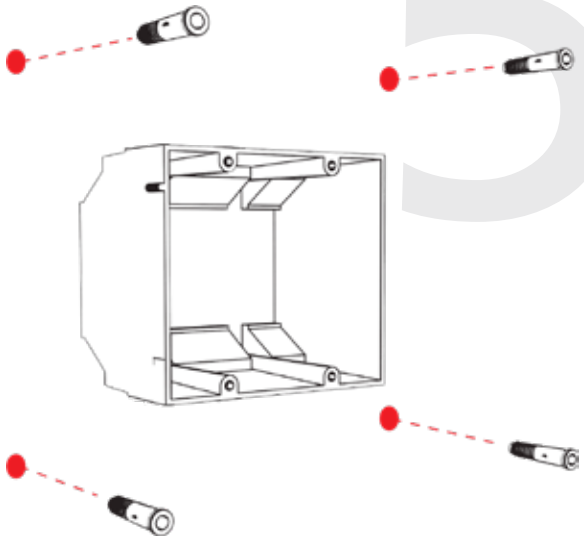

6) Reattach the mounting plate, this time using all four long, silver #8 screws, then insert the four #6-32x1 screws through the mounting plate and into the anchors.

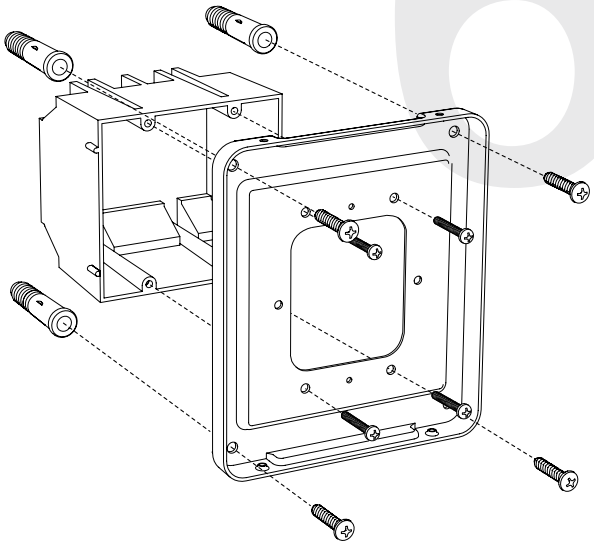

7) Thread any wiring through the mounting plate, and attach a grounding wire to the mounting plate using one of the larger centered holes and the #10-32x3/8 screw.

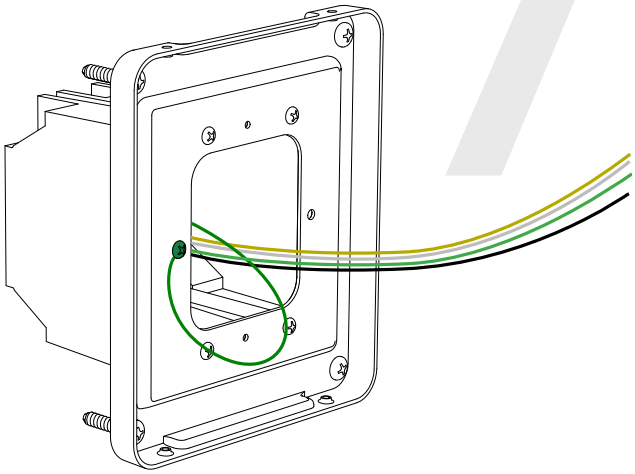

8) Use a screwdriver to remove one of the end caps. The end cap and screw that was used to secure it will not be needed again during this installation.

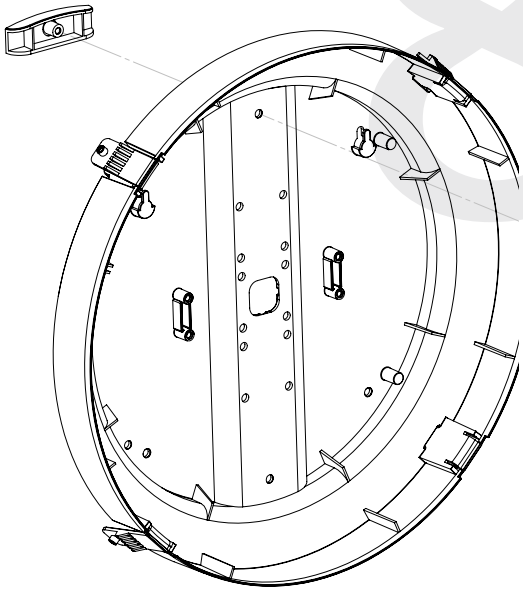

The Sapling Company, Inc.
670 Louis Drive
Warminster, PA 18974
USA

P. (+1) 215.322.6063
F. (+1) 215.322.8498
www.sapling-inc.com

Flag Mount Installation - Round Metal Clock

9) Insert the four #8-32x7/16 screws through the internal-tooth washers, then through the adapter, and finally into the pole. Use a screwdriver to tighten the screws so that the adapter does not move.

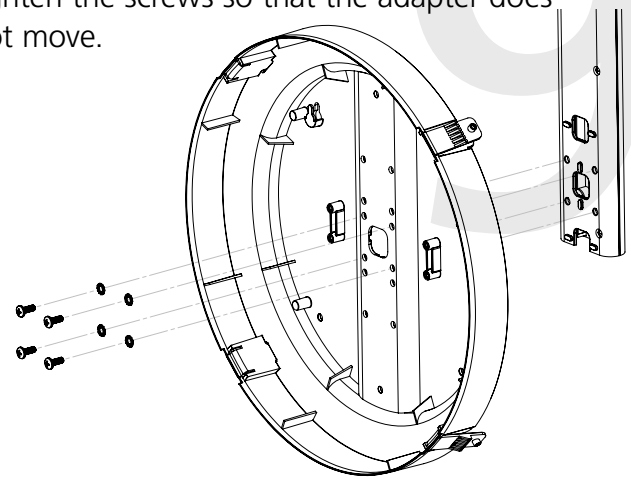

If you are using a metal adapter and are planning on mounting the housing from the ceiling, use pliers to remove the cage nuts and reinstall them in the other two open holes on the housing.

10) Thread at least fifteen inches (38.1cm) of wiring from the gang box through the bottom of the pole until each wire exits through the hole in the adapter.

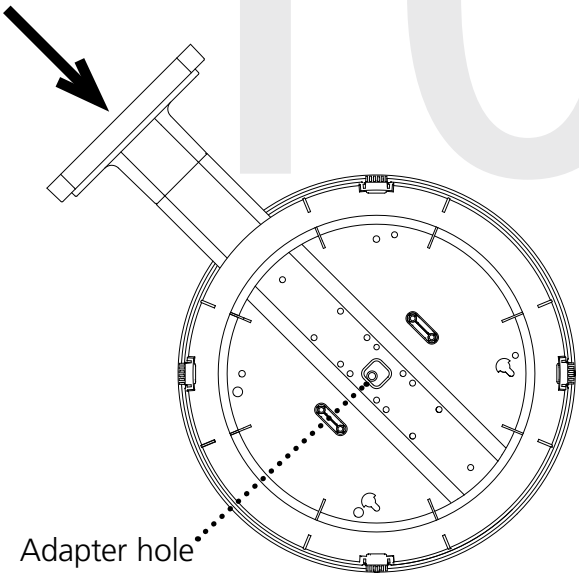

11) Attach the base of the pole to the mounting plate so that the lip is on the top of the base, and the holes for the screws are on the bottom of the base. Hang the base on the mounting plate, attach the wires from the bottom of the pole to the wires in the gang box, then screw the other side of the base onto the mounting plate using the two black screws you set aside before.

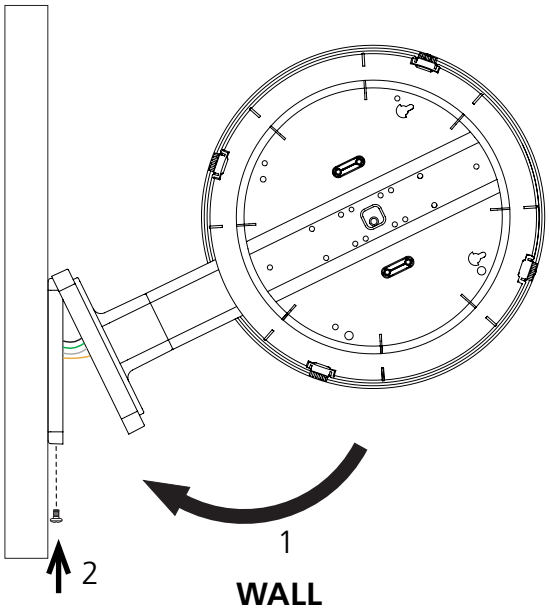

WALL

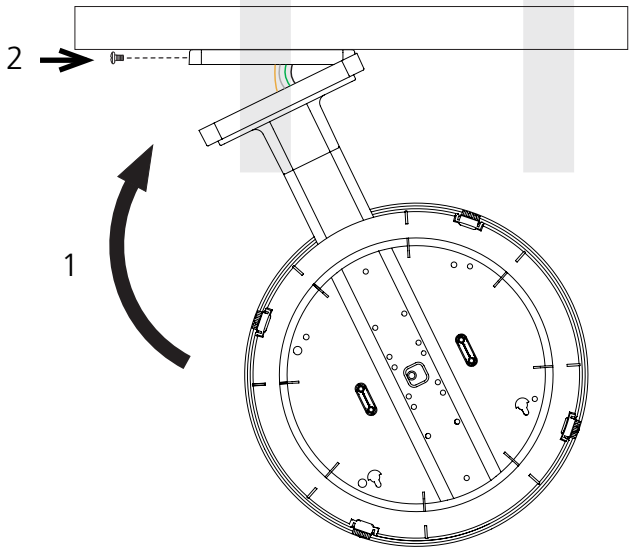

CEILING

The Sapling Company, Inc.
670 Louis Drive
Warminster, PA 18974
USA

P. (+1) 215.322.6063
F. (+1) 215.322.8498
www.sapling-inc.com

Flag Mount Installation - Round Metal Clock

12) Attach the power connector to the wires you threaded through the pole. Consult the diagrams below for additional help, or see the sections of this manual labeled "3-Wire Synchronous (Sync-Wire) Communication Wiring Information" or "2-Wire Digital Communication Wiring Information" for additional details, depending on your system.

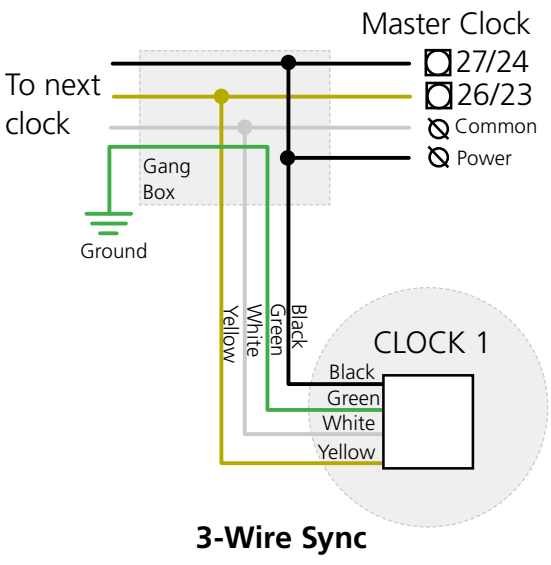

3-Wire Sync

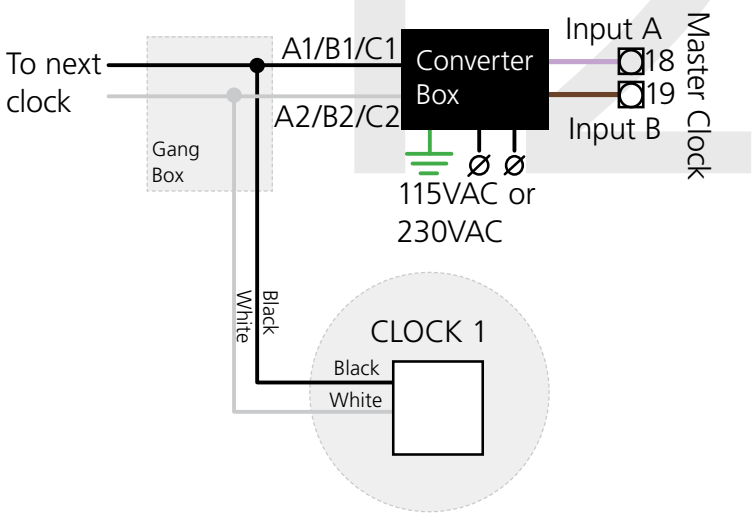

2-Wire Digital

13) Attach the grounding wire to the grounding tab below and to the right of the clock movement.

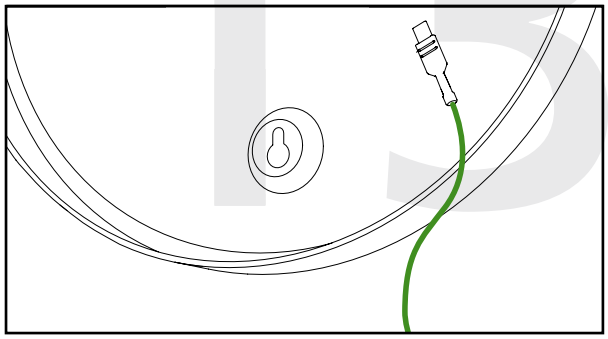

14) Remove the gearbox pin, then, Attach a power connector to the port on the bottom of the movement.

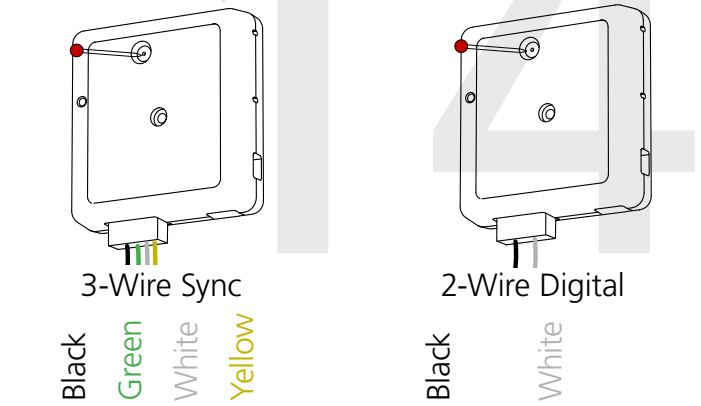

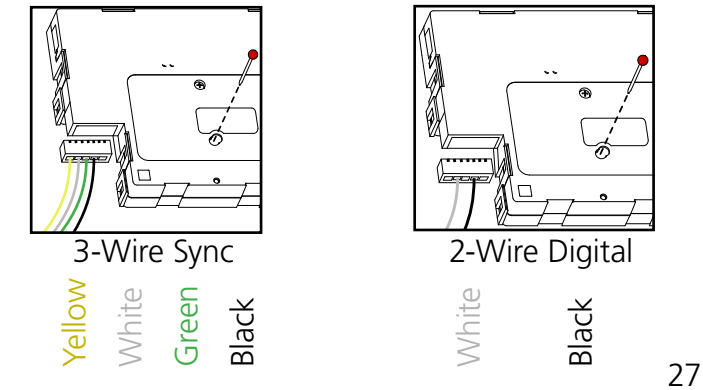

The Sapling Company, Inc.
670 Louis Drive
Warminster, PA 18974
USA

P. (+1) 215.322.6063
F. (+1) 215.322.8498
www.sapling-inc.com

Flag Mount Installation - Round Metal Clock

15) Remove the outer adapter screws, then slide the clock onto the adapter in the rotation that you wish it to be viewed. You should hear a snapping noise as the four clips on the adapter secure the clock in place. Insert the screws again to complete the installation.

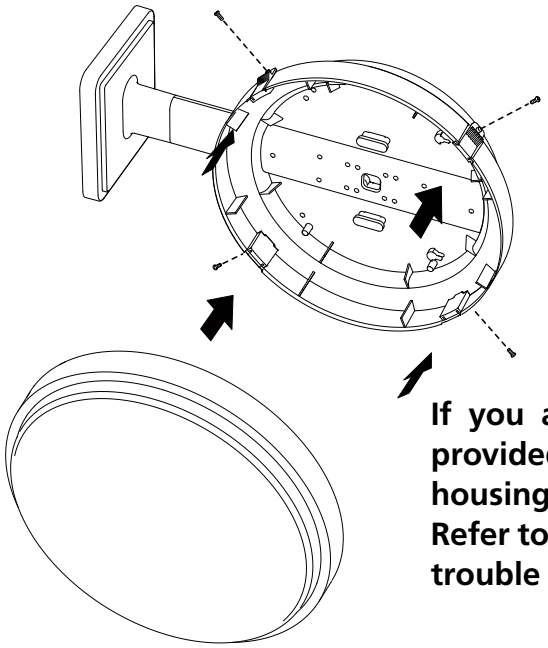

If you are using a metal adapter, install the provided screws through the holes in the clock housing and into the cage nuts on the adapter. Refer to the wall mount instructions if you have trouble locating the holes.

16) If you feel the need to detach the clock from the housing after the installation has been completed, remove the outer adapter screws, press down on the latches, and gently pull on the rim of the clock until the clock detaches.

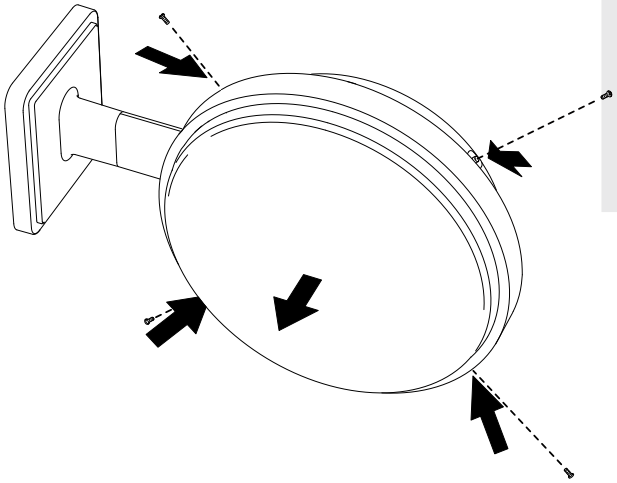

The Sapling Company, Inc.
670 Louis Drive
Warminster, PA 18974
USA

P. (+1) 215.322.6063
F. (+1) 215.322.8498
www.sapling-inc.com

Flag Mount Installation - Round SlimLine/Aluminum Clock

Included in Package

Description	Quantity	Picture
SAM round SlimLine analog clock	1	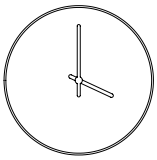
Included in Pole Kit (SAB-1BD-00S-0)		
Dual-mount pole, including mounting plate.	1	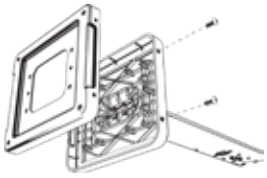
#10-32x3/8 green screw	1	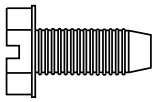
Included in Adapter Kit (A-SLM-MOUNT-12S-0)		
Round Clock Adapter	1	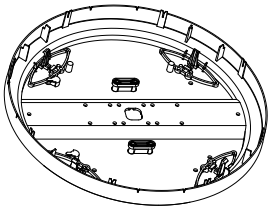
Internal-tooth washer	4	
#8-32x7/16 screw	4	
Included in Gang Box Kit (A-GB-MK-1)		
#6-32x1 screw	2	
#6-19x3/8 screw	1 (not used)	

Continued on next page

If any of the items listed in the kits are missing, you may contact your dealer and order a replacement kit.

The Sapling Company, Inc.
670 Louis Drive
Warminster, PA 18974
USA

P. (+1) 215.322.6063
F. (+1) 215.322.8498
www.sapling-inc.com

Flag Mount Installation - Round SlimLine/Aluminum Clock

Included in Mounting Kit (A-SLM-MK-S-1) or (A-SLM-MK-AW)

Description	Quantity	Picture
Mounting Piece	1 (not used)	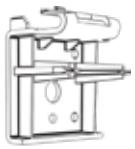
Release lever	0 or 1 (not used)	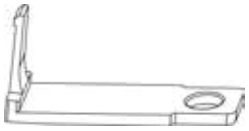
#6-19x7/16 screw	2	
Strain relief	1	

Included in Wiring Kit (A-PK-SAM-1)

Power/grounding wires and connector	1	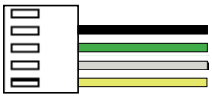
#8x1.5 Self-tapping screw	2 (not used)	
Wall anchor	2 (not used)	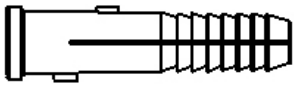

PLEASE NOTE: A user must also provide a Phillips-head screwdriver, a small flat-blade screwdriver, a drill with a 1/4 inch drill bit, a pencil, a double gang box, Four wall anchors (must support support 50 lbs, #8 screw size, 1.5"(3.8cm) screw length), four #8 screws for the wall anchors, two additional #6-32x1 screws for attaching the mounting plate to the gang box, any equipment needed to install the gang box, and any additional wiring needed to extend the signal, power, or ground cables.

If any of the items listed in the wiring kit are missing, you may contact your dealer and order a replacement kit.

SlimLine and Aluminum Clocks use the same installation procedures for flag mount housings.

The Sapling Company, Inc.
670 Louis Drive
Warminster, PA 18974
USA

P. (+1) 215.322.6063
F. (+1) 215.322.8498
www.sapling-inc.com

Flag Mount Installation - Round SlimLine/Aluminum Clock

1) Install the double gang box in the wall or ceiling. If you are installing the gang box in the wall, leave at least eleven inches between the top of the gang box and the ceiling. If you are installing the gang box in the ceiling, leave at least eleven inches between the gang box and the wall. The box should be installed level and plumb with the wall and ceiling.

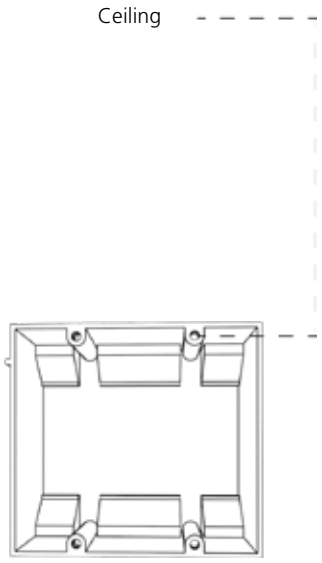

2) Run power and communication wiring to the gang box. See the sections of this manual labeled “Wiring Information” for additional details, depending on your system.

If you are using a 2-wire system, pull the YELLOW and GREEN wires out of the connector.

CHECK YOUR WIRING

The voltage between the white and black wires should measure 105-126 volts AC in the 115 volt model, 207-253 volts AC in the 230 volt model, or 21.5-26.5 volts AC in the 24 volt model.

If you are using the 24 volt model, make sure that the wiring leading to the clock is from an ISOLATED transformer.

3) Detach the mounting plate from the mounting pole by unscrewing the two screws. Set the screws and pole aside for later.

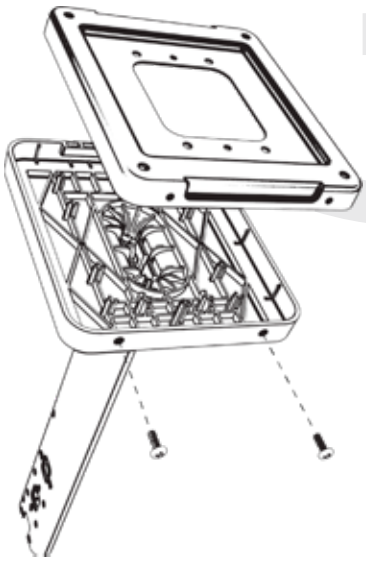

4) Attach the mounting plate to the gang box using only two of the four long, silver #6-32x1 screws. With the mounting plate as a guide, use the pencil to trace the locations of the four larger holes at the outer corners.

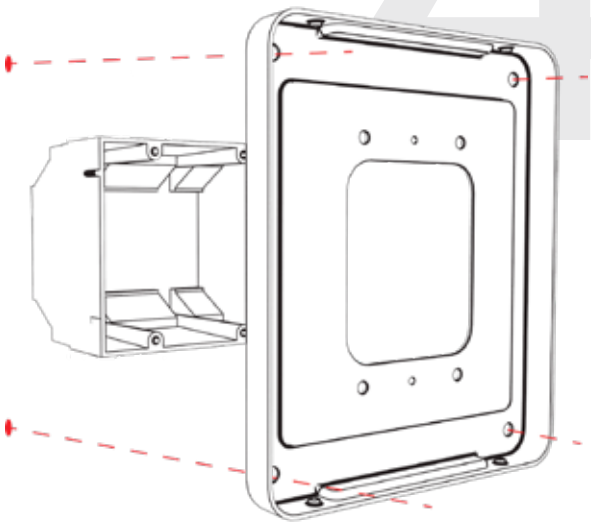

The Sapling Company, Inc.
670 Louis Drive
Warminster, PA 18974
USA

P. (+1) 215.322.6063
F. (+1) 215.322.8498
www.sapling-inc.com

Flag Mount Installation - Round SlimLine/Aluminum Clock

5) Remove the mounting plate and drill the four holes that were just traced. Insert the four wall anchors into the holes.

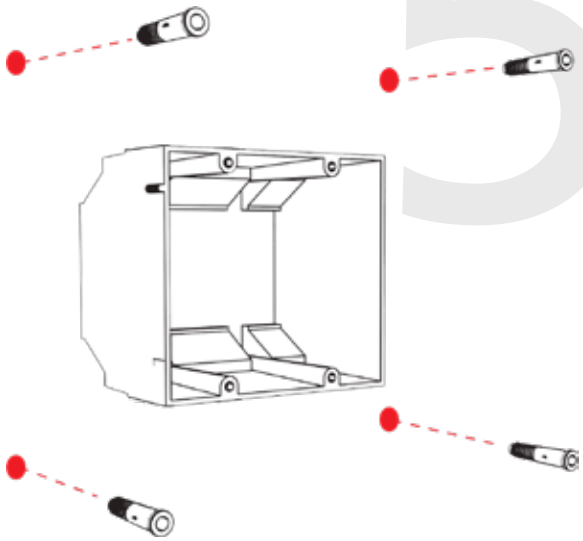

6) Reattach the mounting plate, this time using all four long, silver #6-32x1 screws, then insert the four #8 screws through the mounting plate and into the anchors.

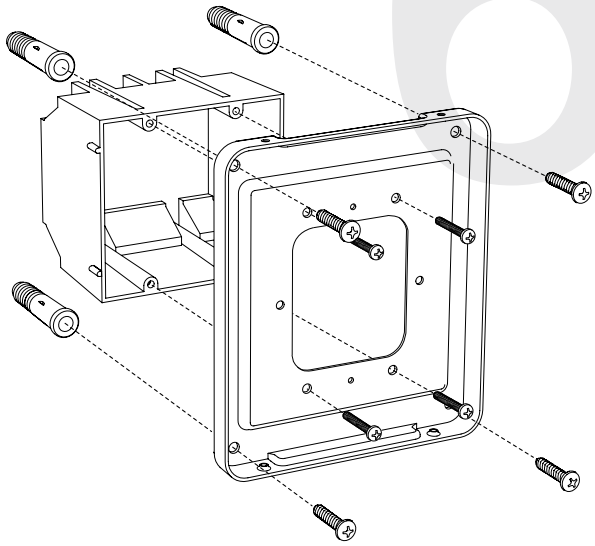

7) Thread any wiring through the mounting plate, and attach a grounding wire to the mounting plate using one of the larger centered holes and the #10-32x3/8 screw.

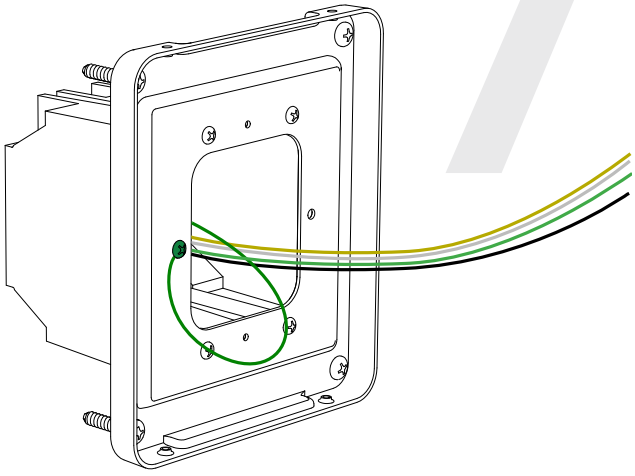

8) Use a screwdriver to remove one of the end caps. The end cap and screw that was used to secure it will not be needed again during this installation.

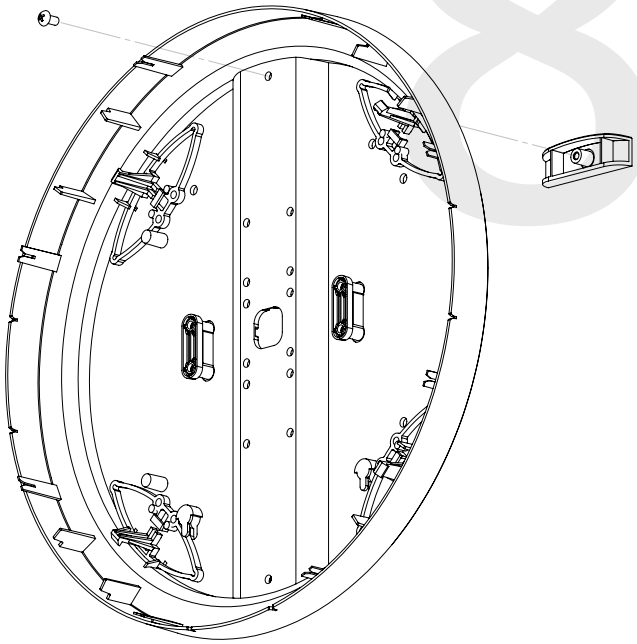

The Sapling Company, Inc.
670 Louis Drive
Warminster, PA 18974
USA

P. (+1) 215.322.6063
F. (+1) 215.322.8498
www.sapling-inc.com

Flag Mount Installation - Round SlimLine/Aluminum Clock

9) Insert the four #8-32x7/16 screws through the internal-tooth washers, then through the adapter, and finally into the pole. Use a screwdriver to tighten the screws so that the adapter does not move.

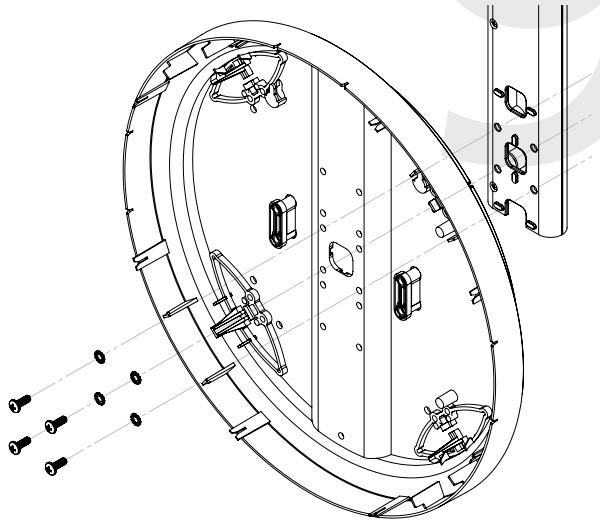

10) Thread at least fifteen inches (38.1cm) of wiring from the gang box through the bottom of the pole until each wire exits through the hole in the adapter.

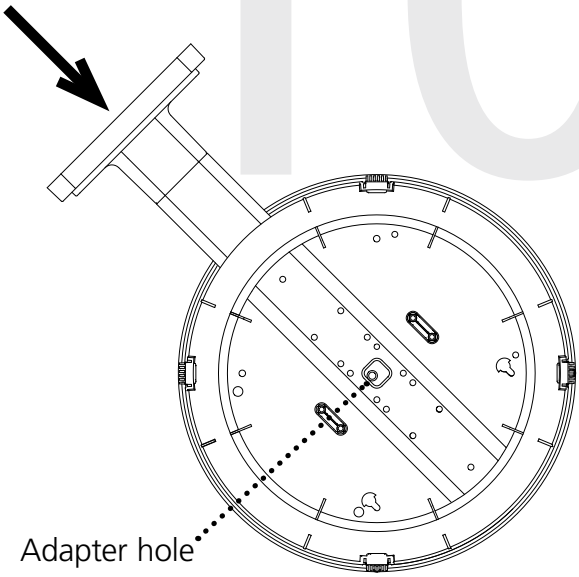

11) Attach the base of the pole to the mounting plate so that the lip is on the top of the base, and the holes for the screws are on the bottom of the base. Hang the base on the mounting plate, attach the wires from the bottom of the pole to the wires in the gang box, then screw the other side of the base onto the mounting plate using the two black screws you set aside before.

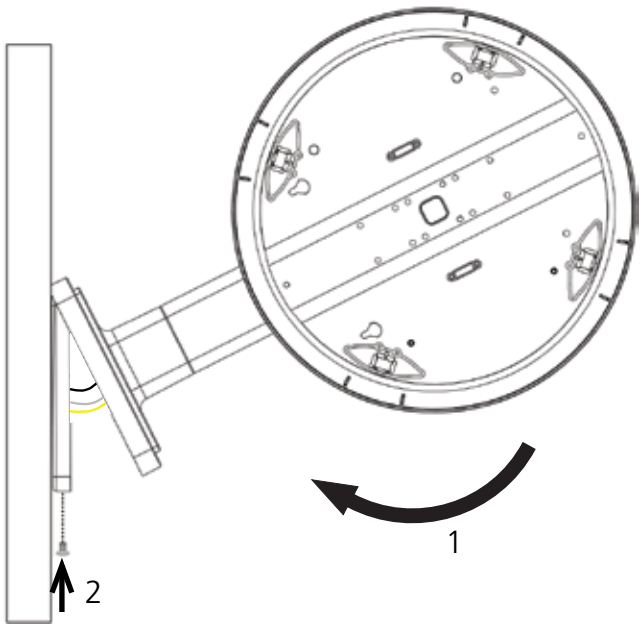

WALL

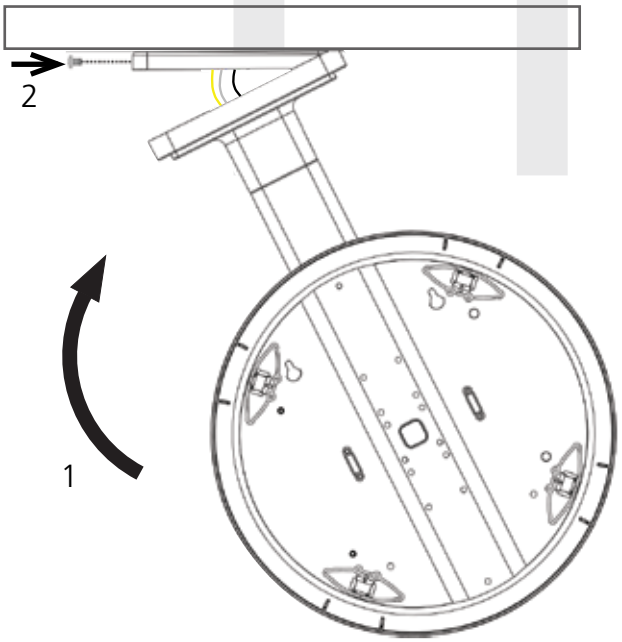

CEILING

The Sapling Company, Inc.
670 Louis Drive
Warminster, PA 18974
USA

P. (+1) 215.322.6063
F. (+1) 215.322.8498
www.sapling-inc.com

Flag Mount Installation - Round SlimLine/Aluminum Clock

12) Attach the signal and power wires from your kit to the wires you threaded through the pole. Consult the diagrams below for additional help, or see the sections of this manual labeled "3-Wire Synchronous (Sync-Wire) Communication Wiring Information" or "2-Wire Digital Communication Wiring Information" for additional details, depending on your system.

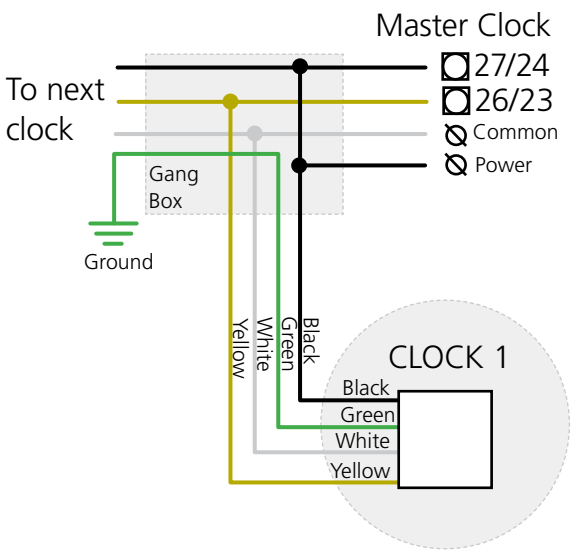

3-Wire Sync

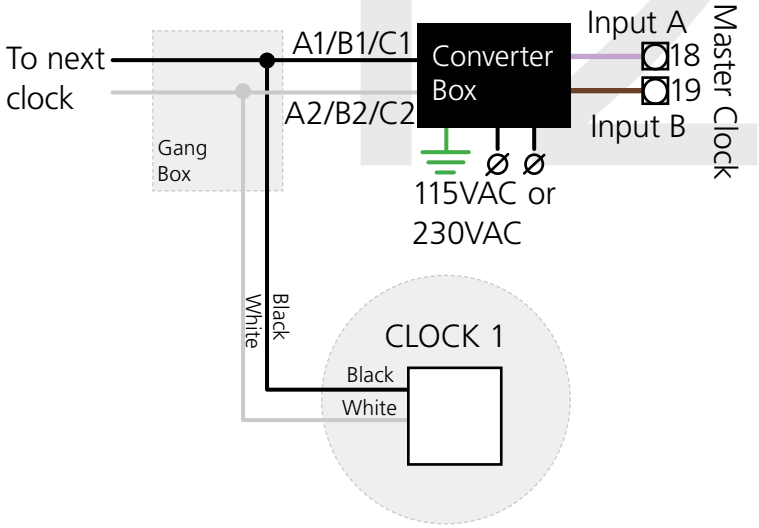

2-Wire Digital

13) **Remove the gearbox pin**, then attach a power connector to the port on the side of the movement.

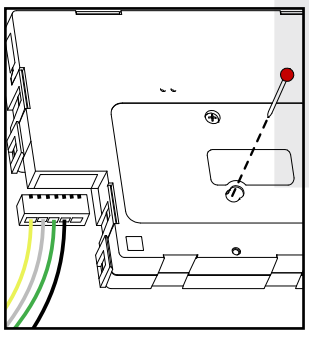

3-Wire Sync

Yellow
White
Green
Black

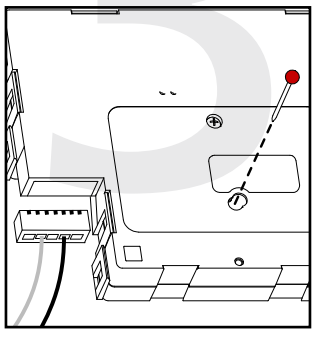

2-Wire Digital

White
Black

14) Lay any excess wiring across the strain relief base, then attach the strain relief to the clock with the two #6-19x7/16 screws. The strain relief should be tight enough to prevent the wire from sliding.

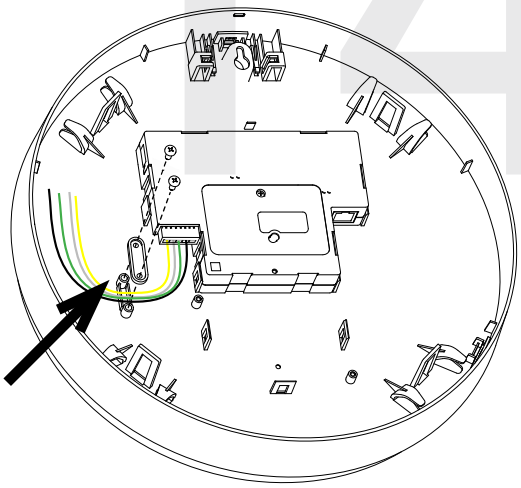

The Sapling Company, Inc.
670 Louis Drive
Warminster, PA 18974
USA

P. (+1) 215.322.6063
F. (+1) 215.322.8498
www.sapling-inc.com

Flag Mount Installation - Round SlimLine/Aluminum Clock

15) Slide the clock onto the adapter in the rotation that you wish it to be viewed. You should hear a snapping noise as the four clips on the adapter secure the clock in place.

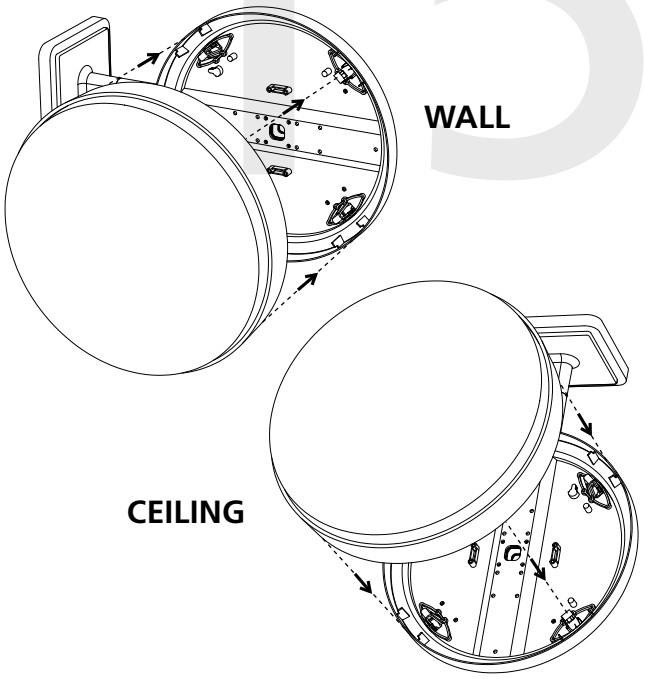

16) If you feel the need to detach the clock from the housing after the installation has been completed, use a flat-blade screwdriver on the four slots around the outside of the housing. You may hear a snapping noise as the internal latches disengage.

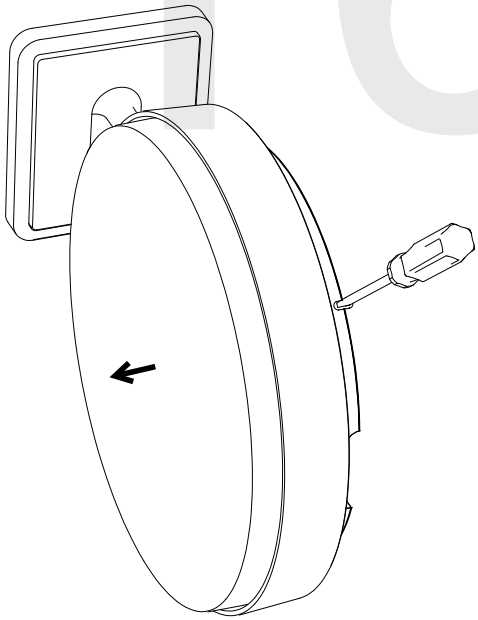

The Sapling Company, Inc.
670 Louis Drive
Warminster, PA 18974
USA

P. (+1) 215.322.6063
F. (+1) 215.322.8498
www.sapling-inc.com

Flag Mount Installation - Square Clock

Included in Package

Description	Quantity	Picture
SAM square analog clock	1	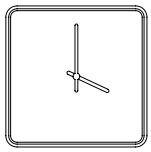
Included in Pole Kit (SAB-4GD-00S-0 or SAB-1GD-00S-0)		
Dual-mount pole, including mounting plate.	1	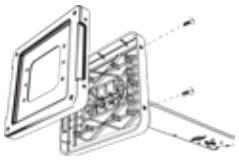
#8-32x7/16 screw	8 (4 used)	
M3.5-1.0x10 screw (black)	4 (not used)	
Internal-tooth washer	8 (4 used)	
#10-32x3/8 green screw	1	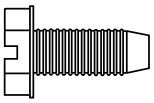
Included in Pole Kit (SAB-4GD-00S-0 or SAB-1GD-00S-0)		
Power/grounding wires and connector	1	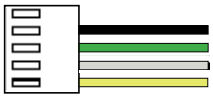
#8x1.5 Self-tapping screw	2 (not used)	
Wall anchor	2 (not used)	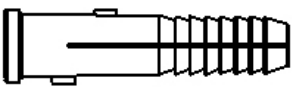
Included in Gang Box Kit (A-GB-MK-1)		
#6-32x1 screw	2	
#6-19x3/8 screw	1 (not used)	

PLEASE NOTE: A user will also have to provide a Phillips-head screwdriver, a small flat-blade screwdriver, a drill with a 1/4 inch drill bit, a pencil, a double gang box, Four wall anchors (must support support 50 lbs, #8 screw size, 1.5”(3.8cm) screw length), four #8 screws for the wall anchors, two additional #6-32x1 screws for attaching the mounting plate to the gang box, any equipment needed to install the gang box, and any additional wiring needed to extend the signal, power, or ground cables.

If any of the items listed in the kits are missing, you may contact your dealer and order a replacement kit.

The Sapling Company, Inc.
670 Louis Drive
Warminster, PA 18974
USA

P. (+1) 215.322.6063
F. (+1) 215.322.8498
www.sapling-inc.com

Flag Mount Installation - Square Clock

1) Install the double gang box in the wall or ceiling. If you are installing the gang box in the wall, leave at least eleven inches between the top of the gang box and the ceiling. If you are installing the gang box in the ceiling, leave at least eleven inches between the gang box and the wall. The box should be installed level and plumb with the wall and ceiling.

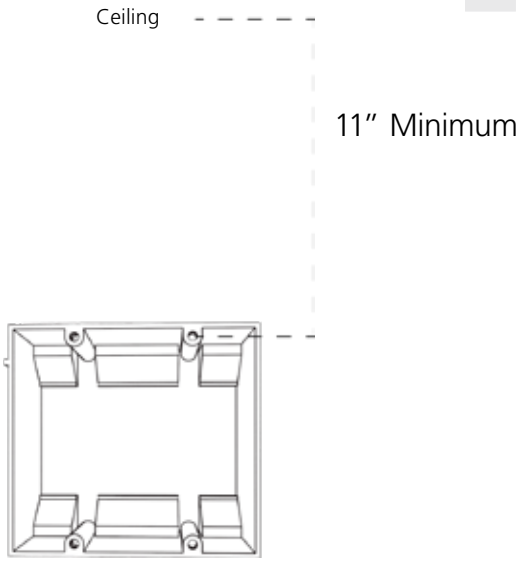

2) Run power and communication wiring to the gang box. See the sections of this manual labeled "Wiring Information" for additional details, depending on your system.

If you are using a 2-wire system, pull the YELLOW and GREEN wires out of the connector.

CHECK YOUR WIRING

The voltage between the white and black wires should measure 105-126 volts AC in the 115 volt model, 207-253 volts AC in the 230 volt model, or 21.5-26.5 volts AC in the 24 volt model.

If you are using the 24 volt model, make sure that the wiring leading to the clock is from an ISOLATED transformer.

3) Detach the mounting plate from the mounting pole by unscrewing the two screws. Set the screws and pole aside for later.

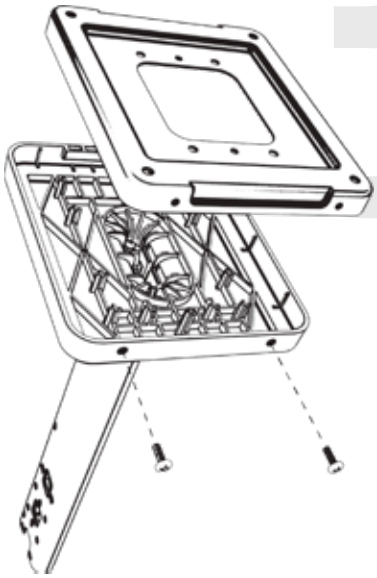

4) Attach the mounting plate to the gang box using only two of the four long, silver #6-32x1 screws. With the mounting plate as a guide, use the pencil to trace the locations of the four larger holes at the outer corners.

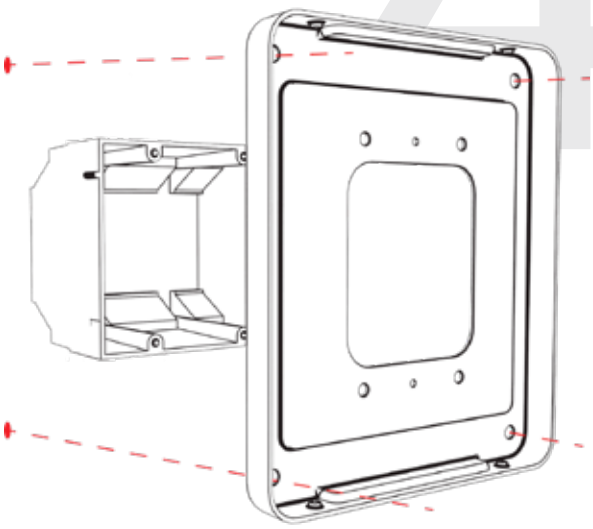

The Sapling Company, Inc.
670 Louis Drive
Warminster, PA 18974
USA

P. (+1) 215.322.6063
F. (+1) 215.322.8498
www.sapling-inc.com

Flag Mount Installation - Square Clock

5) Remove the mounting plate and drill the four holes that were just traced. Insert the four wall anchors into the holes.

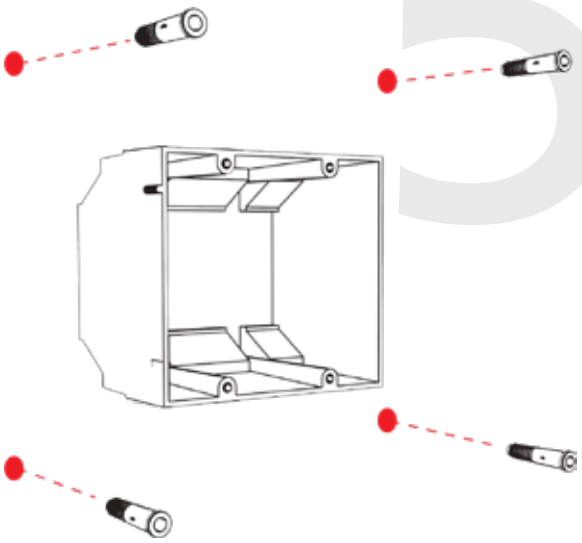

6) Reattach the mounting plate, this time using all four long, silver #6-32x1 screws, then insert the four #8 screws through the mounting plate and into the anchors.

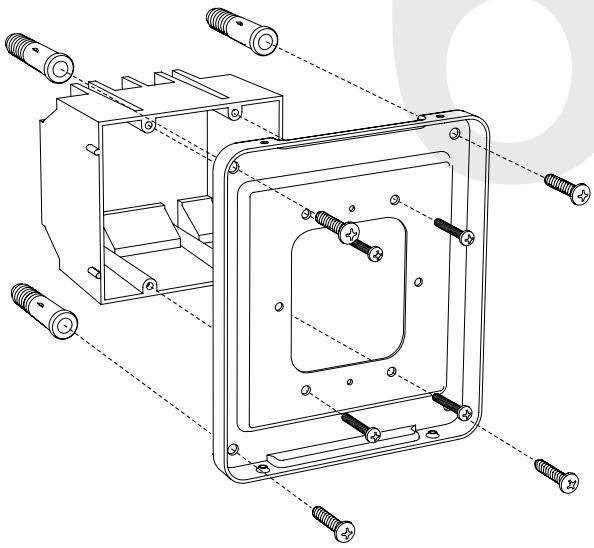

7) Thread any wiring through the mounting plate, and attach a grounding wire to the mounting plate using one of the larger centered holes and the #10-32x3/8 screw.

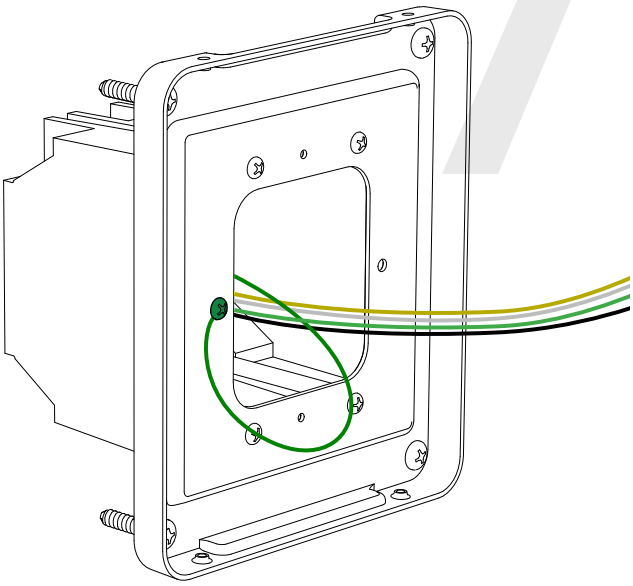

8) Detach the housing from the back of each clock. Do this by inserting a flat-blade screwdriver about 1/8 inch into each of the slot holes until the piece detaches. You may hear a snapping noise as the latches disengage.

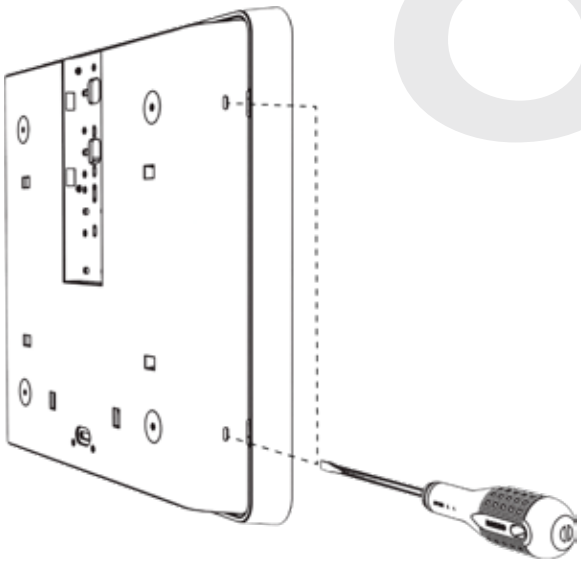

The Sapling Company, Inc.
670 Louis Drive
Warminster, PA 18974
USA

P. (+1) 215.322.6063
F. (+1) 215.322.8498
www.sapling-inc.com

Flag Mount Installation - Square Clock

9) Release the mounting piece from the back of the housing by sliding it towards the center of the housing, then pulling it back and away from the housing. You will not need the mounting pieces later; either store them or throw them away at your discretion. **DO NOT THROW AWAY THE HOUSINGS.**

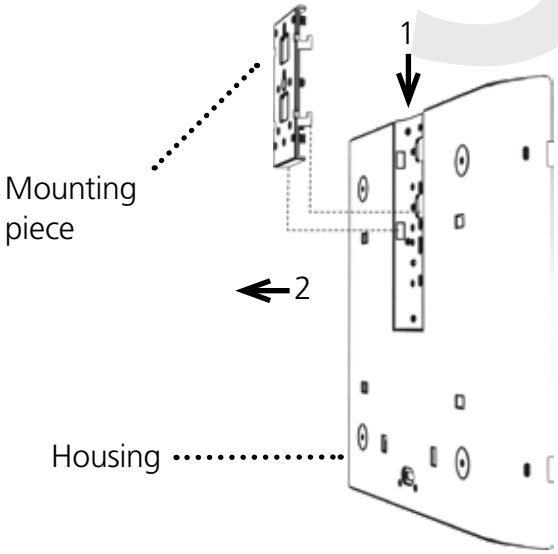

10) Attach the clock housing to the pole using four black #8-32x7/16 screws and four internal-tooth washers.

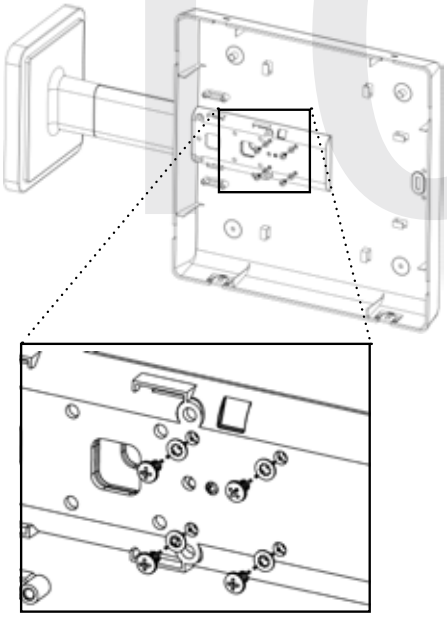

11) Thread at least fifteen inches (38.1cm) of wiring from the gang box through the bottom of the pole until each wire exits through the hole in the adapter.

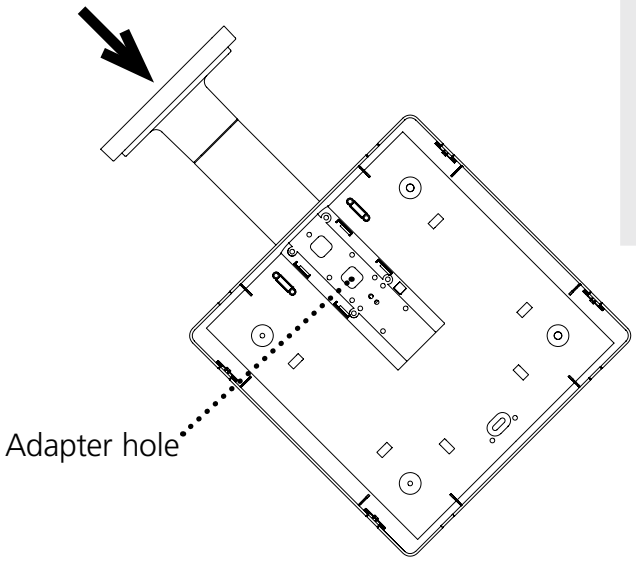

The Sapling Company, Inc.
670 Louis Drive
Warminster, PA 18974
USA

P. (+1) 215.322.6063
F. (+1) 215.322.8498
www.sapling-inc.com

Flag Mount Installation - Square Clock

12) Attach the base of the pole to the mounting plate, so that the lip is on the top of the base, and the holes for the screws are on the bottom of the base. Hang the base on the mounting plate, attach the wires from the bottom of the pole to the wires in the gang box, then screw the other side of the base onto the mounting plate using the two black screws you set aside before.

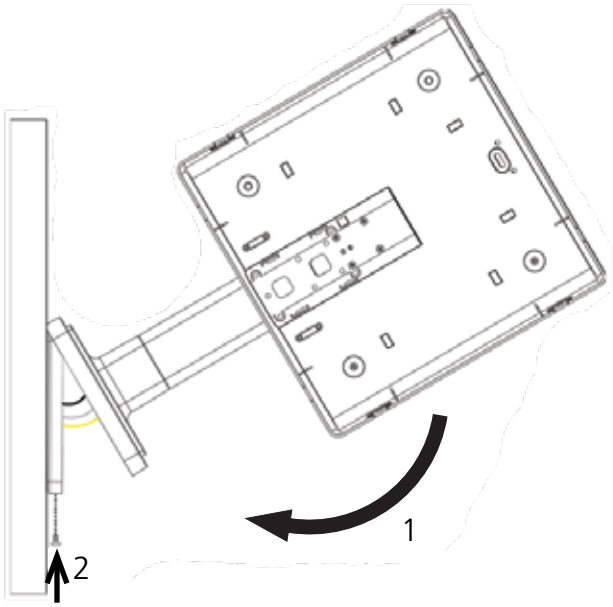

WALL

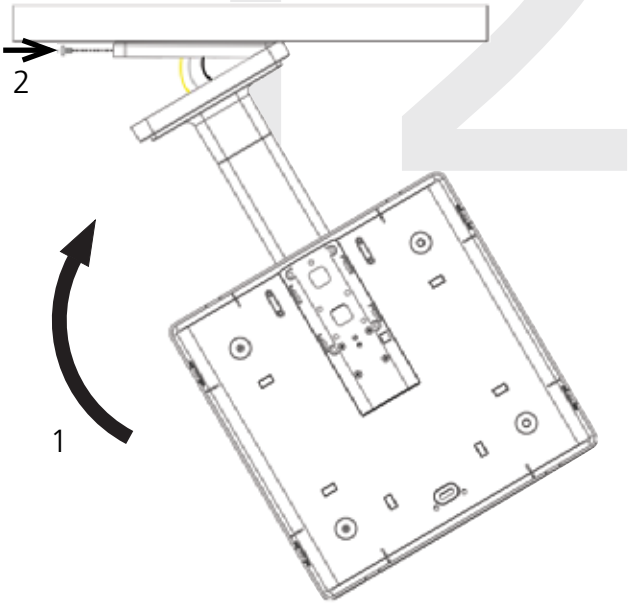

CEILING

13) Attach the signal and power wires from your kit to the wires you threaded through the pole. Consult the diagrams below for additional help, or see the sections of this manual labeled "3-Wire Synchronous (Sync-Wire) Communication Wiring Information" or "2-Wire Digital Communication Wiring Information" for additional details, depending on your system.

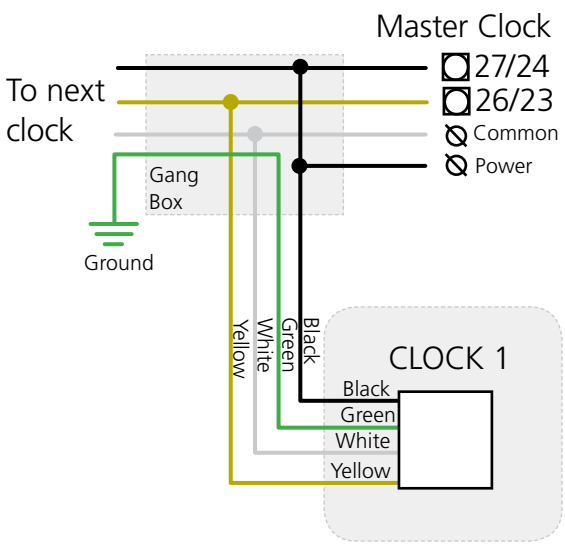

3-Wire Sync

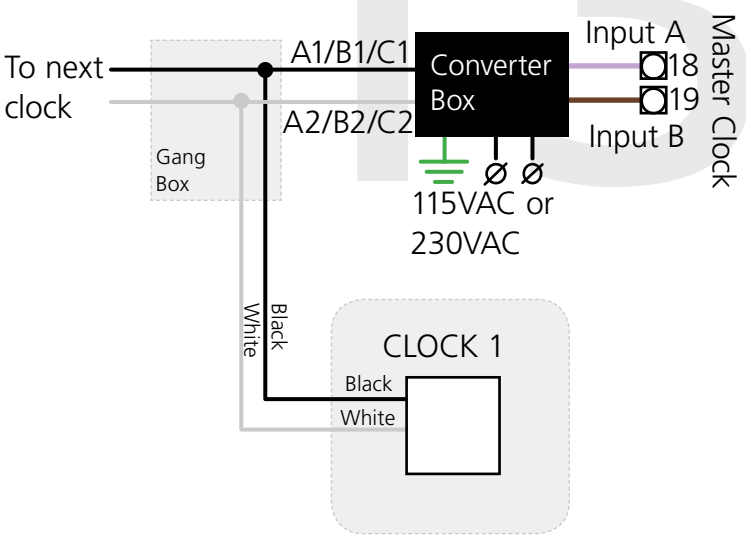

2-Wire Digital

The Sapling Company, Inc.
670 Louis Drive
Warminster, PA 18974
USA

P. (+1) 215.322.6063
F. (+1) 215.322.8498
www.sapling-inc.com

Flag Mount Installation - Square Clock

14) **Remove the gearbox pin**, then attach the power connector to the port on the movement.

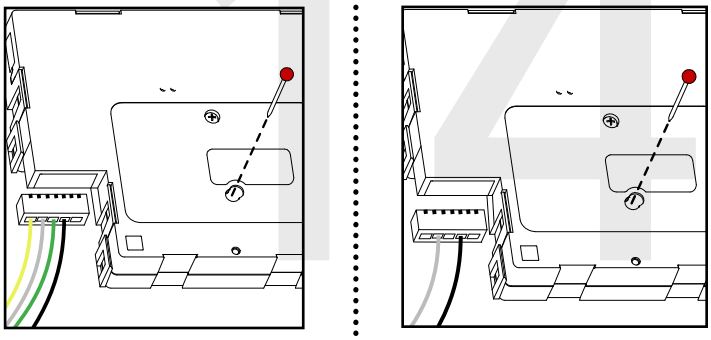

3-Wire Sync

Yellow
White
Green
Black

2-Wire Digital

White
Black

15) Loosen the strain relief by unscrewing the two screws. Slip any excess wiring through them, then tighten the strain relief by reinserting and tightening the screws.

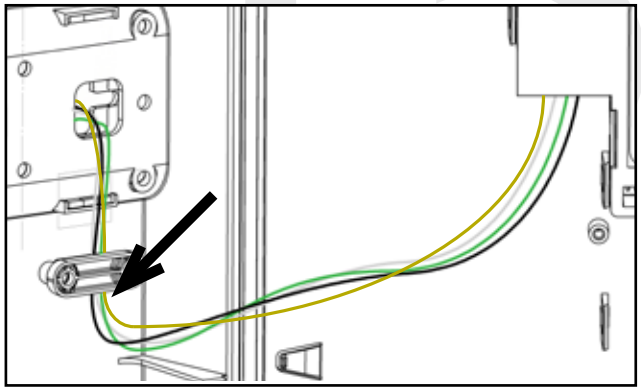

16) Rotate the clock so that it is right-side up. Slide the clock back into its housing. You should hear a snapping noise as the latches reengage.

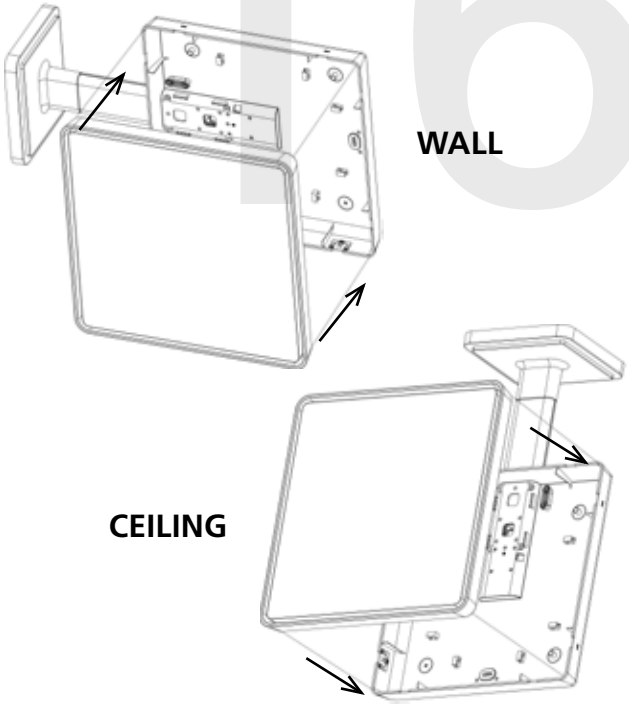

17) If you feel the need to detach the clock from the housing after the installation has been completed, use a flat-blade screwdriver on the four slots around the outside of the housing. You may hear a snapping noise as the internal latches disengage.

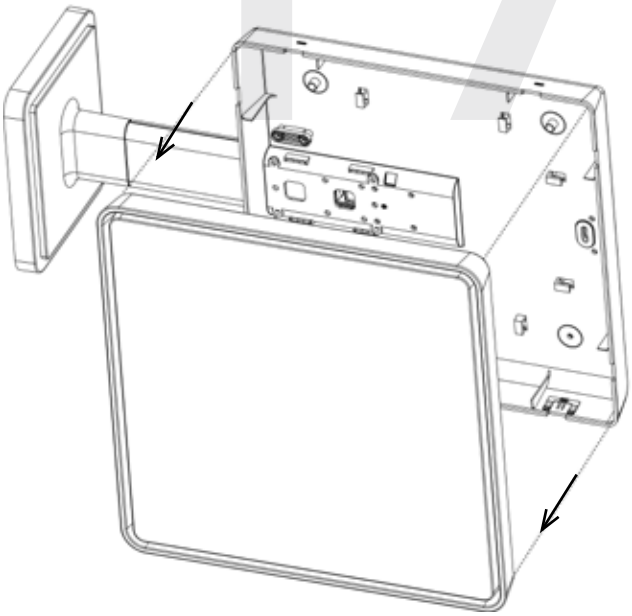

The Sapling Company, Inc.
670 Louis Drive
Warminster, PA 18974
USA

P. (+1) 215.322.6063
F. (+1) 215.322.8498
www.sapling-inc.com

Double Mount Installation - Round Metal Clock

Included in Package

Description	Quantity	Picture
SAM round analog clock	2	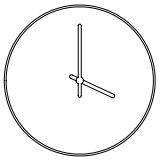
Mounting Bracket	2 (not used)	

Included in Double Mount Kit (SAB-4BD-12R-0M or SAB-4BD-16R-0M)

Dual-mount pole, including mounting plate and adapters	1	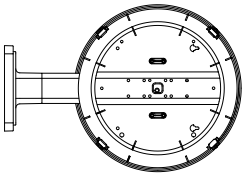
#10-32x3/8 green screw	1	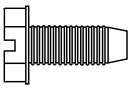

Included in Wiring Kit (A-PK-12-2A)

Power/grounding wires and connector	2	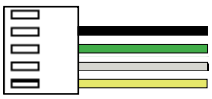
#6-32x1/2 screw	4 (not used)	
M4-0.5x10	4 (not used)	
#8x1.5 Self-tapping screw	2 (not used)	
Wall anchor	2 (not used)	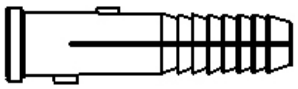
Additional grounding wire with connector	2	

PLEASE NOTE: A user will also have to provide a Phillips-head screwdriver, a small slot-head screwdriver, a drill with a 1/4 inch drill bit, a pencil, a double gang box, Four wall anchors that can support 50 lbs and a maximum screw size of 10x1.5", four #8 screws for the wall anchors, four #6-32x1 screws for attaching the mounting plate to the gang box, any equipment needed to install the gang box, and any additional wiring needed to extend the signal, power, or ground cables.

The Sapling Company, Inc.
670 Louis Drive
Warminster, PA 18974
USA

P. (+1) 215.322.6063
F. (+1) 215.322.8498
www.sapling-inc.com

Double Mount Installation - Round Metal Clock

1) Install the double gang box in the wall or ceiling. If you are installing the gang box in the wall, leave at least eleven inches between the top of the gang box and the ceiling. If you are installing the gang box in the ceiling, leave at least eleven inches between the gang box and the wall.

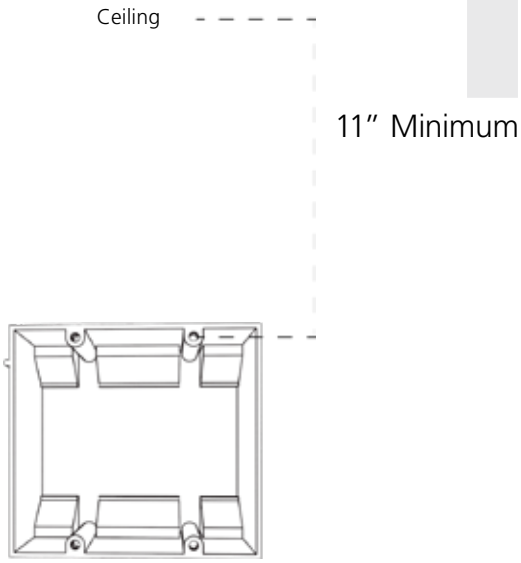

2) Run power and communication wiring to the gang box. See the sections of this manual labeled "Wiring Information" for additional details, depending on your system.

If you are using a 2-wire system, pull the YELLOW and GREEN wires out of the connectors.

CHECK YOUR WIRING

The voltage between the white and black wires should measure 105-126 volts AC in the 115 volt model, 207-253 volts AC in the 230 volt model, or 21.5-26.5 volts AC in the 24 volt model.

If you are using the 24 volt model, make sure that the wiring leading to the clock is from an ISOLATED transformer.

3) Detach the mounting plate from the mounting pole by unscrewing the two screws. Set the screws and pole aside for later.

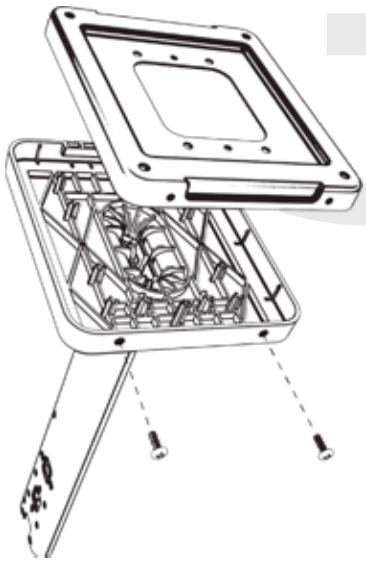

4) Attach the mounting plate to the gang box using only two of the four long silver #6-32x1 screws. With the mounting plate as a guide, use the pencil to trace the locations of the four larger holes at the outer corners.

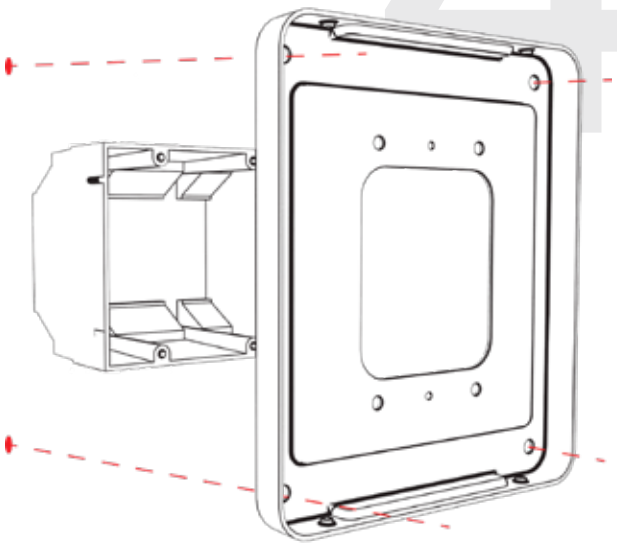

The Sapling Company, Inc.
670 Louis Drive
Warminster, PA 18974
USA

P. (+1) 215.322.6063
F. (+1) 215.322.8498
www.sapling-inc.com

Double Mount Installation - Round Metal Clock

5) Remove the mounting plate and drill the four holes that were just traced. Insert the four wall anchors into the holes.

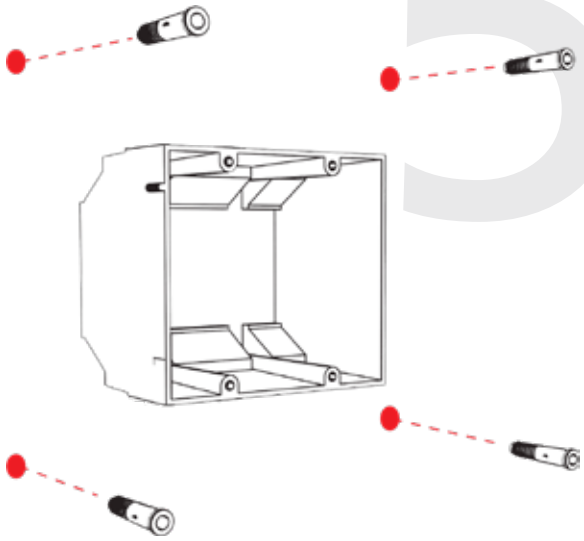

6) Reattach the mounting plate, this time using all four long, silver #8 screws, then insert the four #6-32x1 screws through the mounting plate and into the anchors.

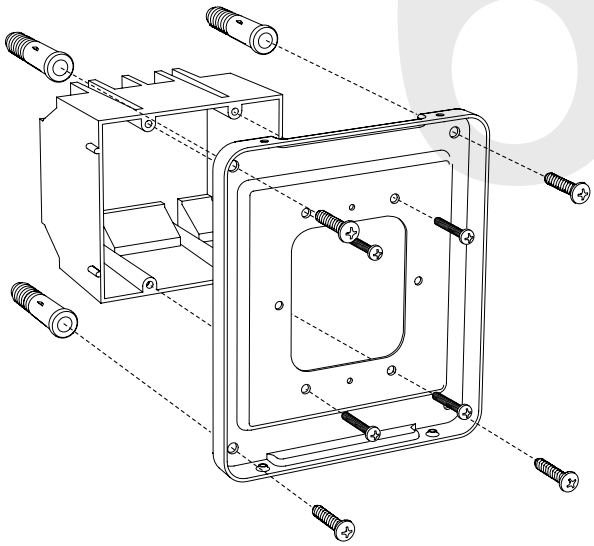

7) Thread any wiring through the mounting plate, and attach a grounding wire to the mounting plate using one of the larger centered holes and the #10-32x3/8 screw.

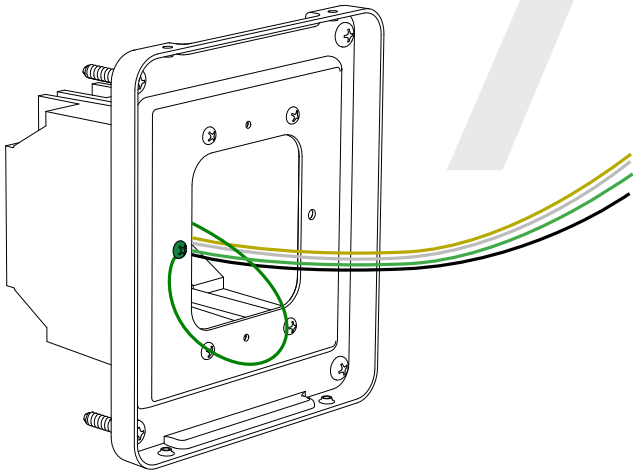

8) Thread at least fifteen inches (38.1cm) of wiring from the gang box through the bottom of the pole until each wire exits through the hole in the adapter.

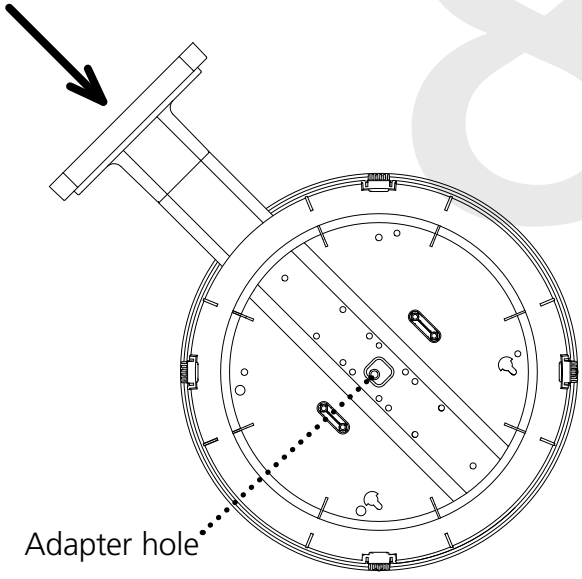

If you are using a metal adapter and are planning on mounting the housing from the ceiling, use pliers to remove the cage nuts and reinstall them in the other two open holes on the housing.

The Sapling Company, Inc.
670 Louis Drive
Warminster, PA 18974
USA

P. (+1) 215.322.6063
F. (+1) 215.322.8498
www.sapling-inc.com

Double Mount Installation - Round Metal Clock

9) Attach the base of the pole to the mounting plate so that the lip is on the top of the base, and the holes for the screws are on the bottom of the base. Hang the base on the mounting plate, attach the wires from the bottom of the pole to the wires in the gang box, then screw the other side of the base onto the mounting plate using the two black screws you set aside before.

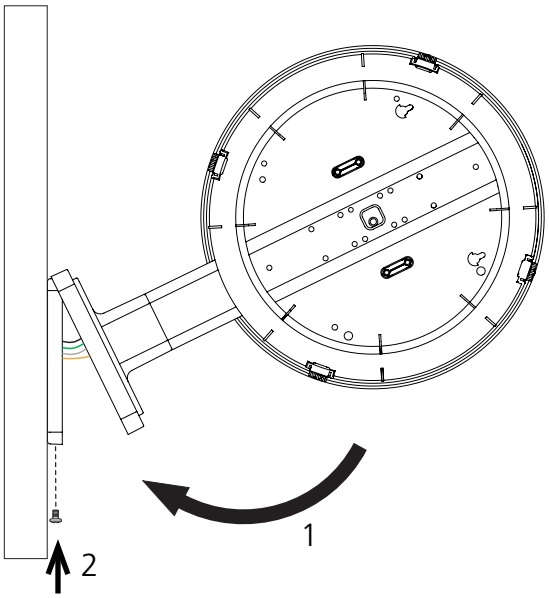

WALL

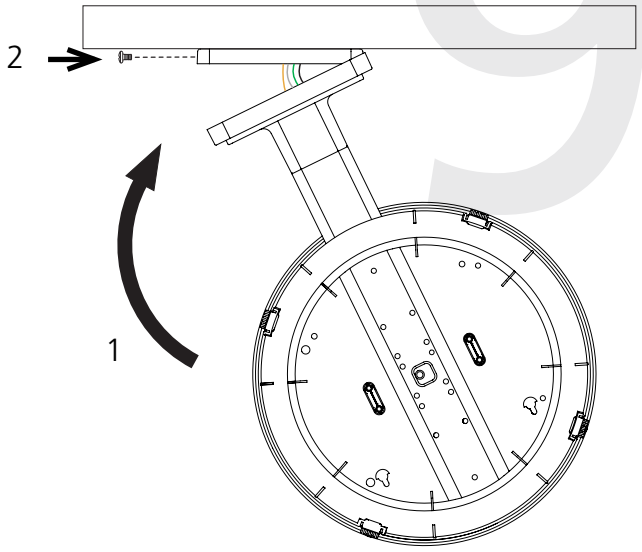

CEILING

10) Attach the power connectors to the wires you threaded through the pole. Consult the diagrams below for additional help, or see the sections of this manual labeled "3-Wire Synchronous (Sync-Wire) Communication Wiring Information" or "2-Wire Digital Communication Wiring Information" for additional details, depending on your system.

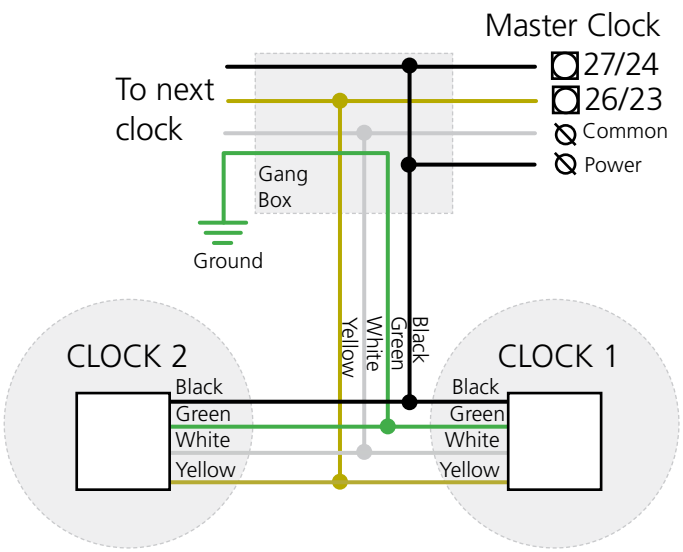

3-Wire Sync

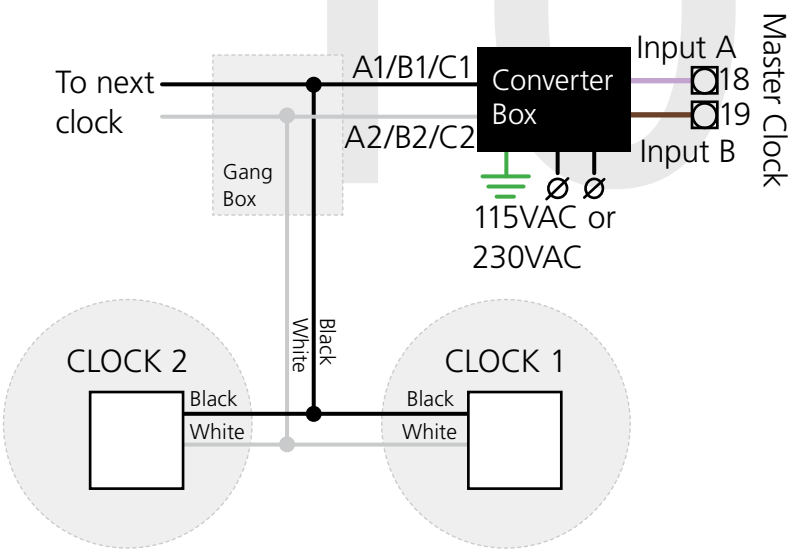

2-Wire Digital

The Sapling Company, Inc.
670 Louis Drive
Warminster, PA 18974
USA

P. (+1) 215.322.6063
F. (+1) 215.322.8498
www.sapling-inc.com

Double Mount Installation - Round Metal Clock

11) if the case is made of metal, attach the grounding wire to the grounding tab below and to the right of the clock movement.

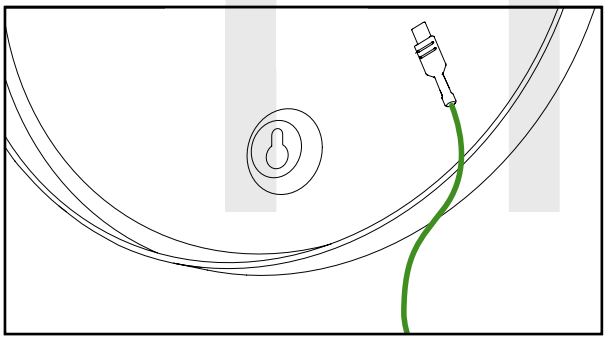

12) Remove the gearbox pins, then attach a power connector to the ports on the bottom of each movement.

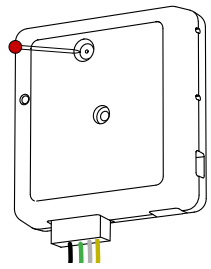

3-Wire Sync

Black Green White Yellow

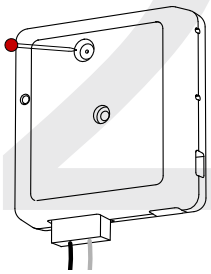

2-Wire Digital

Black White

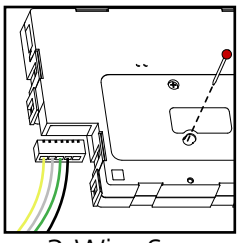

3-Wire Sync

Yellow White Green Black

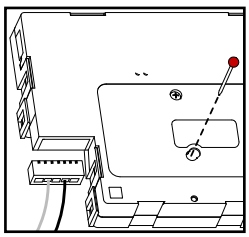

2-Wire Digital

White Black

13) Remove the outer adapter screws, then slide each clock onto the adapter in the rotation that you wish it to be viewed. You should hear a snapping noise as the four clips on the adapter secure the clock in place. Insert the screws again to complete the installation.

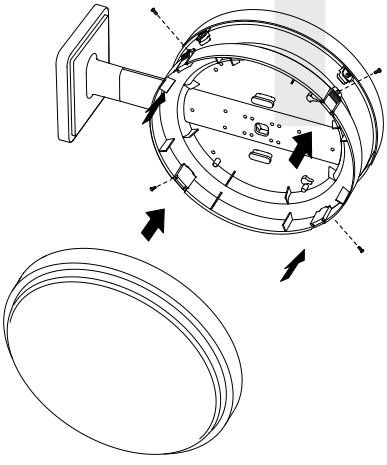

If you are using a metal adapter, install the provided screws through the holes in the clock housing and into the cage nuts on the adapter. Refer to the wall mount instructions if you have trouble locating the holes.

14) If you feel the need to detach the clock from the housing after the installation has been completed, remove the outer adapter screws, press down on the latches, and gently pull on the rim of the clock until the clock detaches.

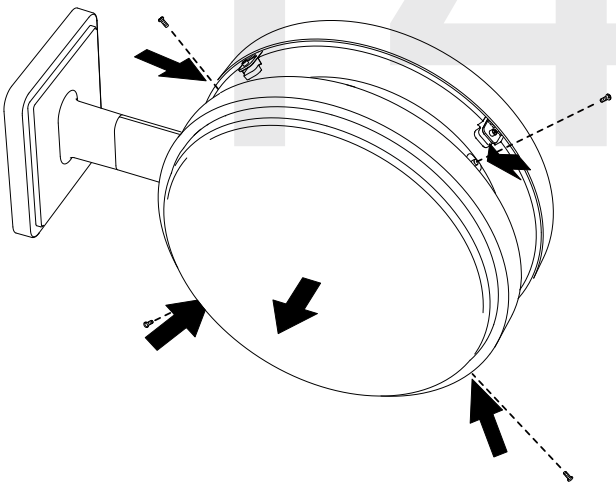

The Sapling Company, Inc.
670 Louis Drive
Warminster, PA 18974
USA

P. (+1) 215.322.6063
F. (+1) 215.322.8498
www.sapling-inc.com

Double Mount Installation - Round SlimLine/Aluminum Clock

Included in Package

Description	Quantity	Picture
SAM round SlimLine analog clock	2	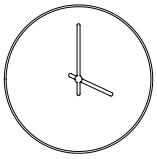

Included in Double Mount Kit (SAH-4BD-12R-0 or SAH-4BD-16R-0)
(SAH-1BD-12R-0 or SAH-1BD-16R-0)

Dual-mount pole, including mounting plate.	1	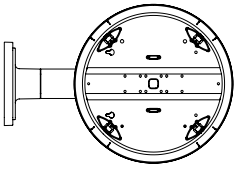
#10-32x3/8 green screw	1	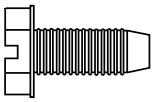

Included in Mounting Kits (A-SLM-MK-S-1) or (A-SLM-MK-AW)

Mounting Piece	2 (not used)	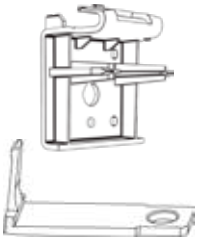
Release lever	0 or 2 (not used)	
#6-19x7/16 screw	4	
Strain relief	2	

Continued on next page

If any of the items listed in the kits are missing, you may contact your dealer and order a replacement kit.

The Sapling Company, Inc.
670 Louis Drive
Warminster, PA 18974
USA

P. (+1) 215.322.6063
F. (+1) 215.322.8498
www.sapling-inc.com

Double Mount Installation - Round SlimLine/Aluminum Clock

Included in Wiring Kits (A-PK-SAM-1)

Description	Quantity	Picture
Power/grounding wires and connector	2	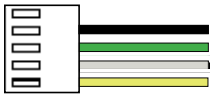
#8x1.5 Self-tapping screw	4 (not used)	
Wall anchor	4 (not used)	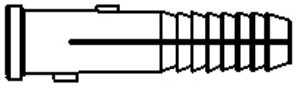

Included in Gang Box Kit (A-GB-MK-1)

#6-32x1 screw	4	
#6-19x3/8 screw	2 (not used)	

PLEASE NOTE: A user will also have to provide a Phillips-head screwdriver, a small flat-blade screwdriver, a drill with a 1/4 inch drill bit, a pencil, a double gang box, Four wall anchors (must support support 50 lbs, #8 screw size, 1.5"(3.8cm) screw length), four #8 screws for the wall anchors, any equipment needed to install the gang box, and any additional wiring needed to extend the signal, power, or ground cables.

SlimLine and Aluminum Clocks use the same installation procedures for double mount housings.

The Sapling Company, Inc.
670 Louis Drive
Warminster, PA 18974
USA

P. (+1) 215.322.6063
F. (+1) 215.322.8498
www.sapling-inc.com

Double Mount Installation - Round SlimLine/Aluminum Clock

1) Install the double gang box in the wall or ceiling. If you are installing the gang box in the wall, leave at least eleven inches between the top of the gang box and the ceiling. If you are installing the gang box in the ceiling, leave at least eleven inches between the gang box and the wall. The box should be installed level and plumb with the wall and ceiling.

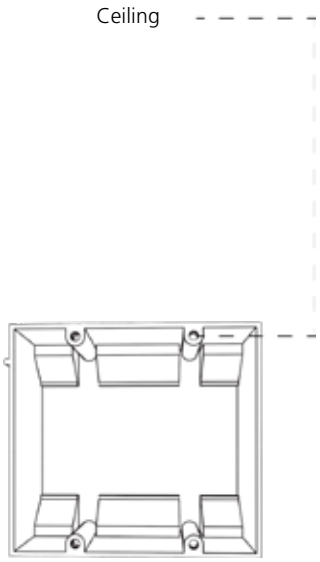

2) Run power and communication wiring to the gang box. See the sections of this manual labeled "Wiring Information" for additional details, depending on your system.

If you are using a 2-wire system, pull the YELLOW and GREEN wires out of the connectors.

CHECK YOUR WIRING

The voltage between the white and black wires should measure 105-126 volts AC in the 115 volt model, 207-253 volts AC in the 230 volt model, or 21.5-26.5 volts AC in the 24 volt model.

If you are using the 24 volt model, make sure that the wiring leading to the clock is from an ISOLATED transformer.

3) Detach the mounting plate from the mounting pole by unscrewing the two screws. Set the screws and pole aside for later.

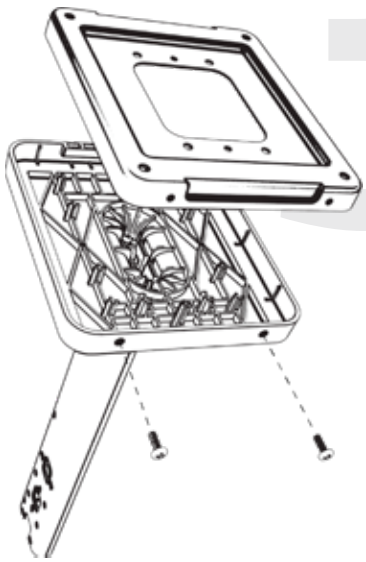

4) Attach the mounting plate to the gang box using only two of the four long, silver #6-32x1 screws. With the mounting plate as a guide, use the pencil to trace the locations of the four larger holes at the outer corners.

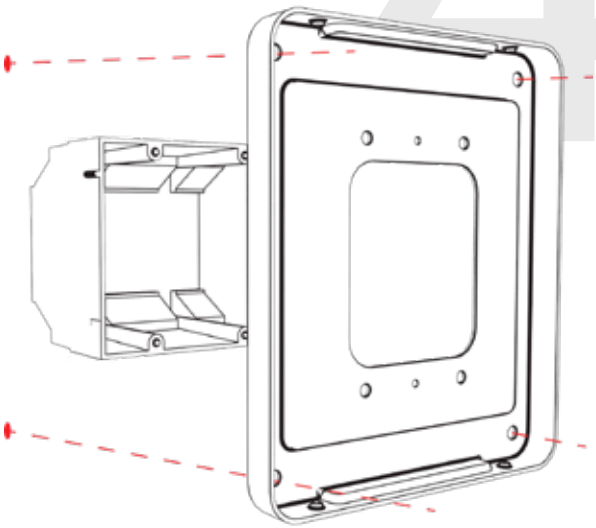

The Sapling Company, Inc.
670 Louis Drive
Warminster, PA 18974
USA

P. (+1) 215.322.6063
F. (+1) 215.322.8498
www.sapling-inc.com

Double Mount Installation - Round SlimLine/Aluminum Clock

5) Remove the mounting plate and drill the four holes that were just traced. Insert the four wall anchors into the holes.

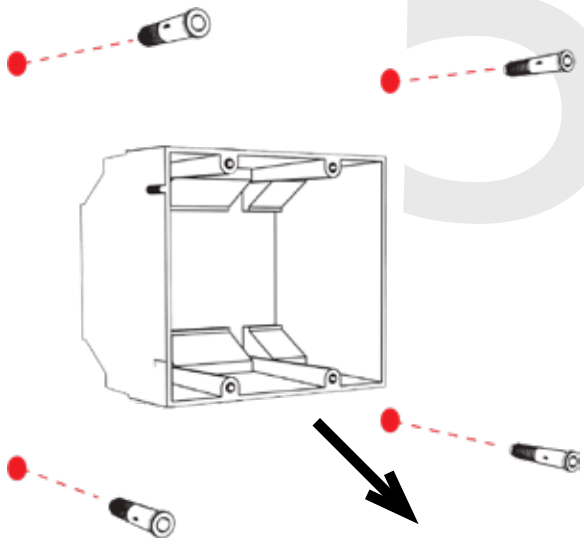

6) Reattach the mounting plate, this time using all four long, silver #6-32x1 screws, then insert the four #8 screws through the mounting plate and into the anchors.

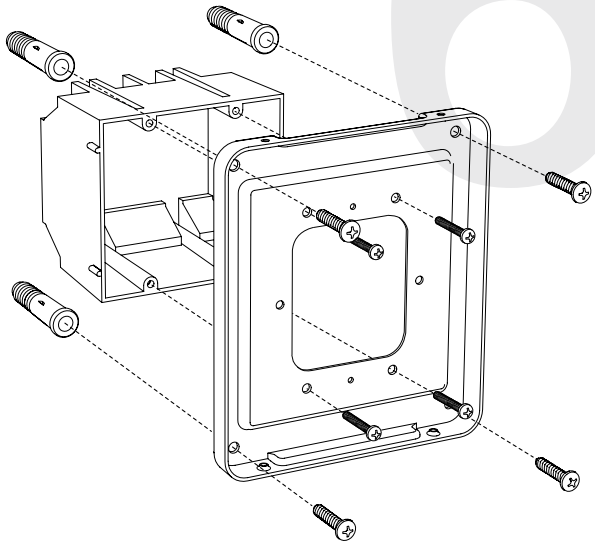

7) Thread any wiring through the mounting plate, and attach a grounding wire to the mounting plate using one of the larger centered holes and the #10-32x3/8 screw.

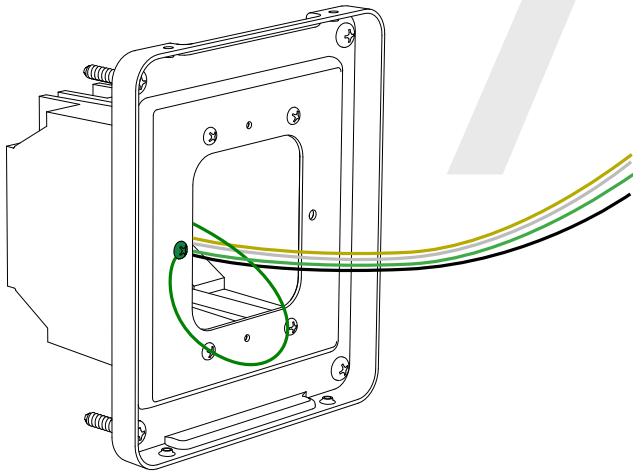

8) Thread at least fifteen inches (38.1cm) of wiring from the gang box through the bottom of the pole until each wire exits through the hole in the adapter.

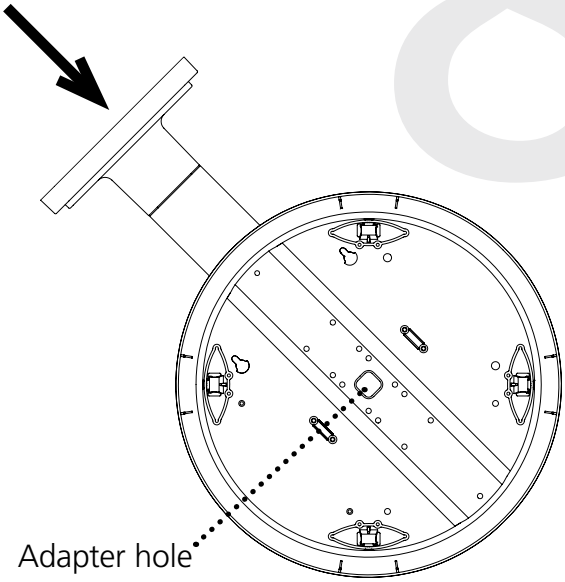

The Sapling Company, Inc.
670 Louis Drive
Warminster, PA 18974
USA

P. (+1) 215.322.6063
F. (+1) 215.322.8498
www.sapling-inc.com

Double Mount Installation - Round SlimLine/Aluminum Clock

9) Attach the base of the pole to the mounting plate so that the lip is on the top of the base, and the holes for the screws are on the bottom of the base. Hang the base on the mounting plate, attach the wires from the bottom of the pole to the wires in the gang box, then screw the other side of the base onto the mounting plate using the two black screws you set aside before.

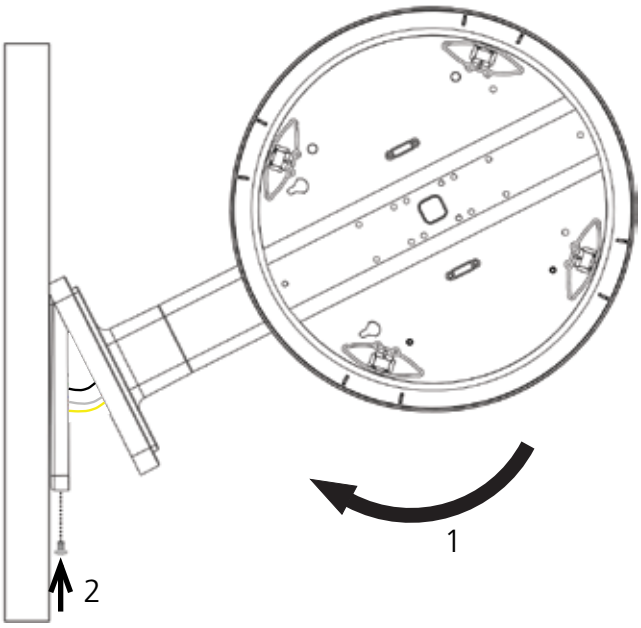

WALL

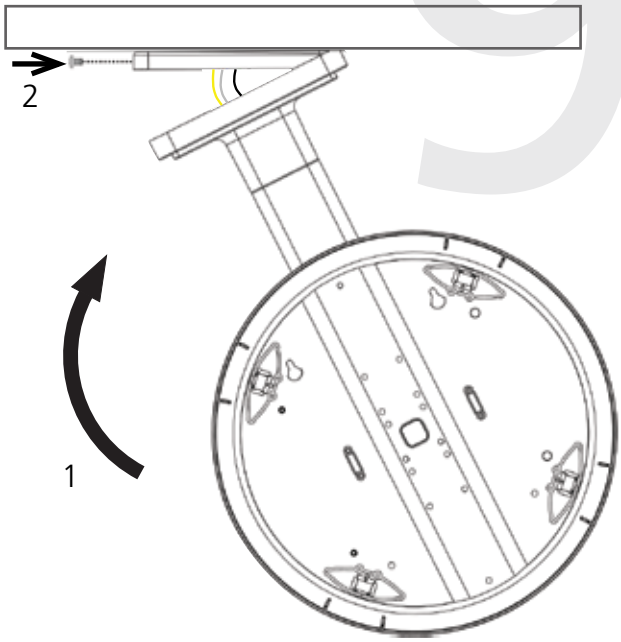

CEILING

10) Attach the signal and power wires from your kit to the wires you threaded through the poles. Consult the diagrams below for additional help, or see the sections of this manual labeled "3-Wire Synchronous (Sync-Wire) Communication Wiring Information" or "2-Wire Digital Communication Wiring Information" for additional details, depending on your system.

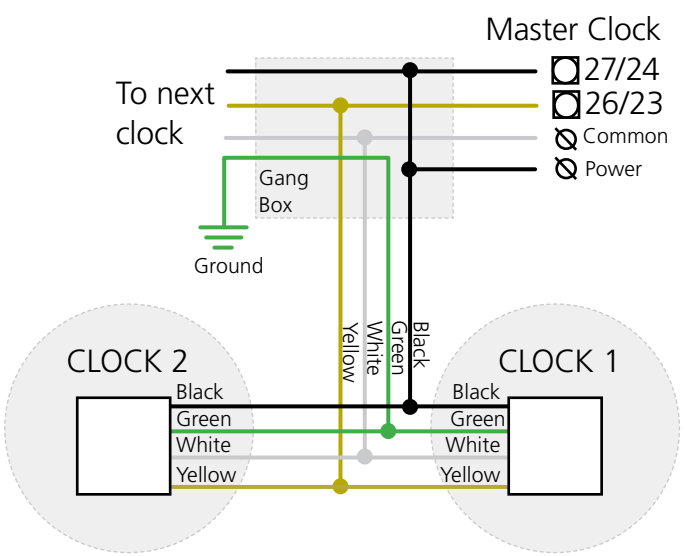

3-Wire Sync

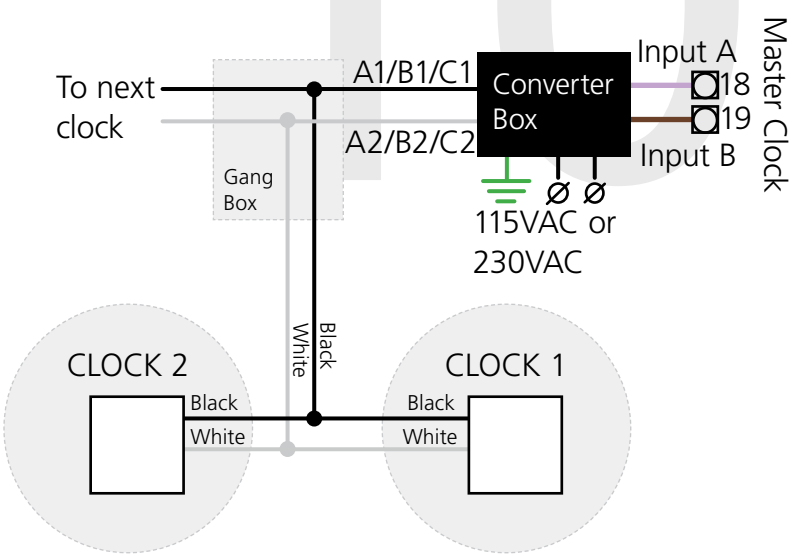

2-Wire Digital

The Sapling Company, Inc.
670 Louis Drive
Warminster, PA 18974
USA

P. (+1) 215.322.6063
F. (+1) 215.322.8498
www.sapling-inc.com

Double Mount Installation - Round SlimLine/Aluminum Clock

11) **Remove the gearbox pins**, then attach a power connector to the ports on the side of each movement.

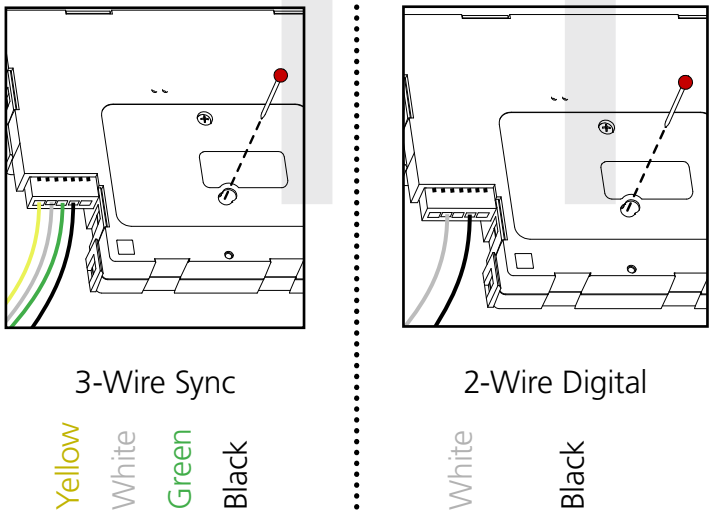

12) Lay any excess wiring across the strain relief base, then attach the strain relief to the clock with the two #6-19x7/16 screws. The strain relief should be tight enough to prevent the wire from sliding.

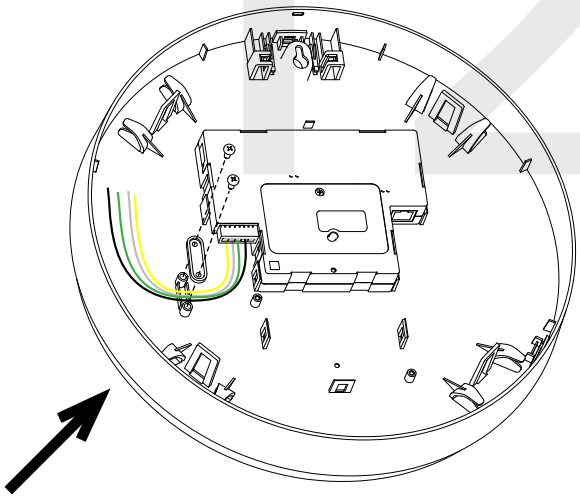

13) Slide each clock onto the adapter in the rotation that you wish it to be viewed. You should hear a snapping noise as the four clips on the adapter secure the clock in place.

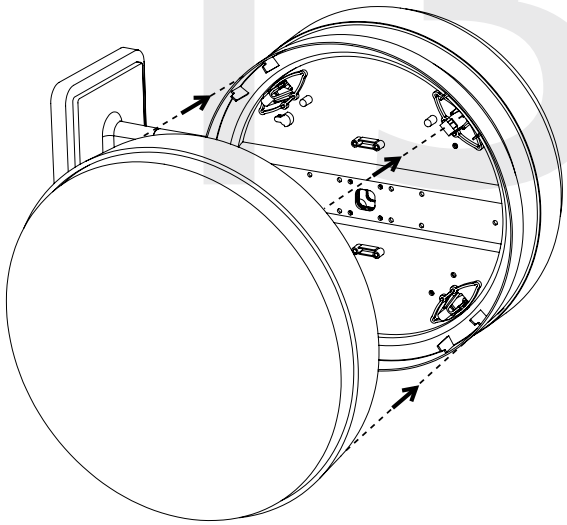

14) If you feel the need to detach the clock from the housing after the installation has been completed, use a flat-blade screwdriver on the four slots around the outside of the housing. You may hear a snapping noise as the internal latches disengage.

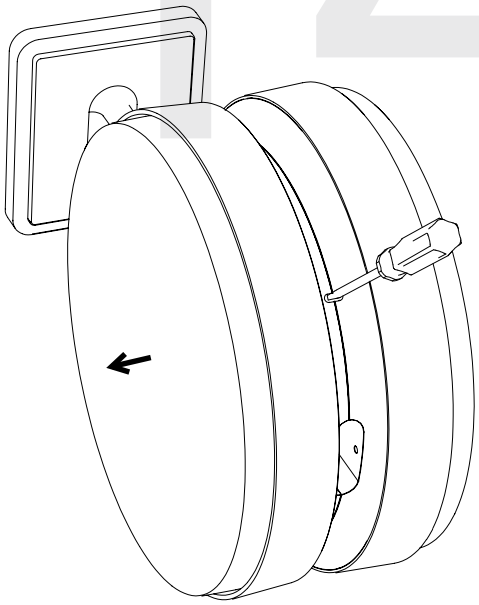

The Sapling Company, Inc.
670 Louis Drive
Warminster, PA 18974
USA

P. (+1) 215.322.6063
F. (+1) 215.322.8498
www.sapling-inc.com

Double Mount Installation - Square Clock

Included in Package

Description	Quantity	Picture
SAM square analog clock	2	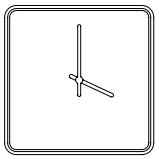
Mounting Piece-already attached to clock housing	2 (not used)	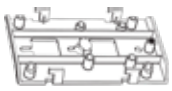

Included in Pole Kit (SAB-4GD-00S-0 or SAB-1GD-00S-0)

Dual-mount pole, including mounting plate.	1	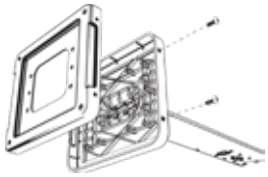
#10-32x3/8 green screw	1	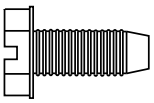
#8-32x7/16 screw	8	
M3.5-1.0x10 screw (black)	4	
Internal-tooth washer	8	

Continued on next page

If any of the items listed in the kits are missing, you may contact your dealer and order a replacement kit.

The Sapling Company, Inc.
670 Louis Drive
Warminster, PA 18974
USA

P. (+1) 215.322.6063
F. (+1) 215.322.8498
www.sapling-inc.com

Double Mount Installation - Square Clock

Included in Wiring Kits (A-PK-SAM-1)

Description	Quantity	Picture
Power/grounding wires and connector	2	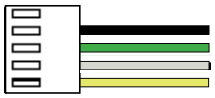
#8x1.5 Self-tapping screw	4 (not used)	
Wall anchor	4 (not used)	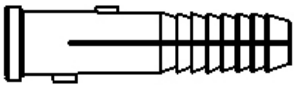

Included in Gang Box Kit (A-GB-MK-1)

#6-32x1 screw	4	
#6-19x3/8 screw	2 (not used)	

PLEASE NOTE: A user will also have to provide a Phillips-head screwdriver, a small flat-blade screwdriver, a drill with a 1/4 inch drill bit, a pencil, a double gang box, Four wall anchors (must support support 50 lbs, #8 screw size, 1.5”(3.8cm) screw length), four #8 screws for the wall anchors, any equipment needed to install the gang box, and any additional wiring needed to extend the signal, power, or ground cables.

The Sapling Company, Inc.
670 Louis Drive
Warminster, PA 18974
USA

P. (+1) 215.322.6063
F. (+1) 215.322.8498
www.sapling-inc.com

Double Mount Installation - Square Clock

1) Install the double gang box in the wall or ceiling. If you are installing the gang box in the wall, leave at least eleven inches between the top of the gang box and the ceiling. If you are installing the gang box in the ceiling, leave at least eleven inches between the gang box and the wall. The box should be installed level and plumb with the wall and ceiling.

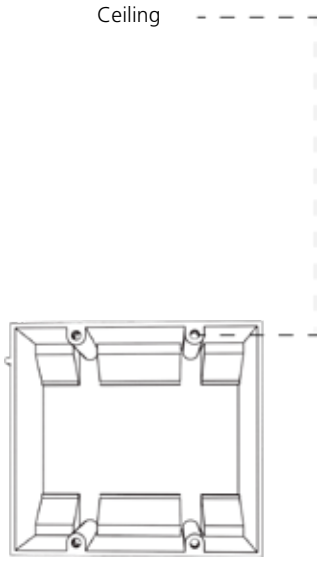

2) Run power and communication wiring to the gang box. See the sections of this manual labeled "Wiring Information" for additional details, depending on your system.

If you are using a 2-wire system, pull the YELLOW and GREEN wires out of the connectors.

CHECK YOUR WIRING

The voltage between the white and black wires should measure 105-126 volts AC in the 115 volt model, 207-253 volts AC in the 230 volt model, or 21.5-26.5 volts AC in the 24 volt model.

If you are using the 24 volt model, make sure that the wiring leading to the clock is from an ISOLATED transformer.

3) Detach the mounting plate from the mounting pole by unscrewing the two screws. Set the screws and pole aside for later.

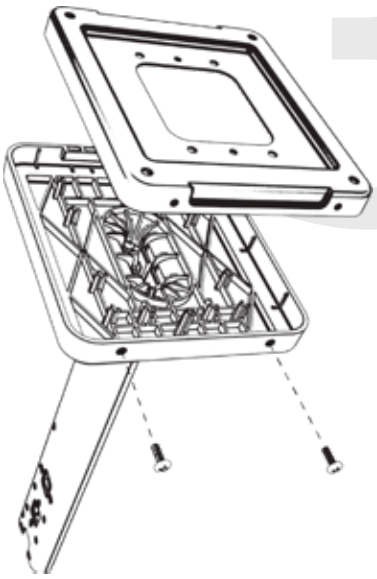

4) Attach the mounting plate to the gang box using only two of the four long, silver #6-32x1 screws. With the mounting plate as a guide, use the pencil to trace the locations of the four larger holes at the outer corners.

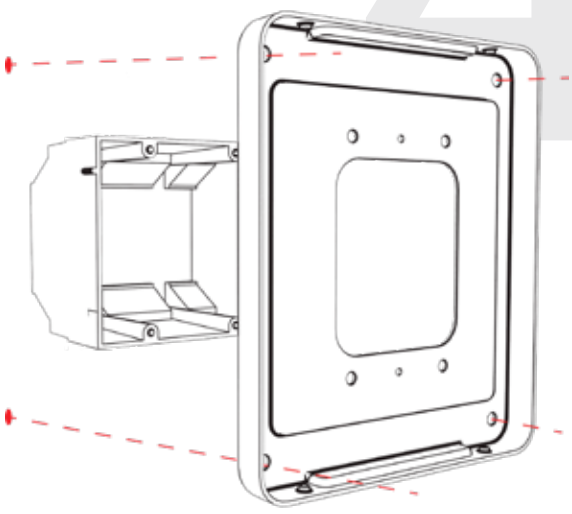

The Sapling Company, Inc.
670 Louis Drive
Warminster, PA 18974
USA

P. (+1) 215.322.6063
F. (+1) 215.322.8498
www.sapling-inc.com

Double Mount Installation - Square Clock

5) Remove the mounting plate and drill the four holes that were just traced. Insert the four wall anchors into the holes.

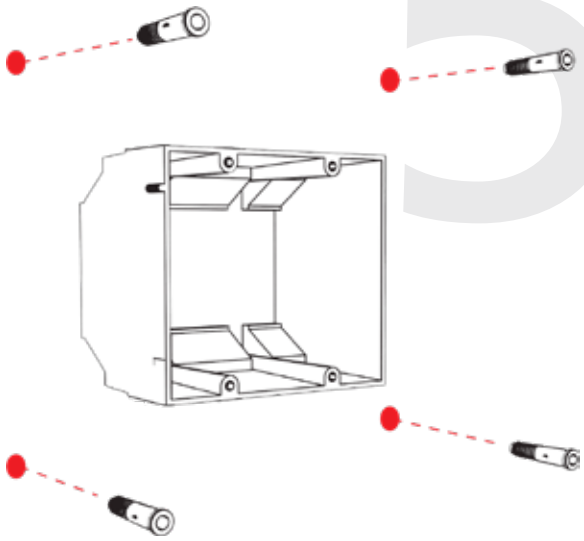

6) Reattach the mounting plate, this time using all four long, silver #6-32x1 screws, then insert the four #8 screws through the mounting plate and into the anchors.

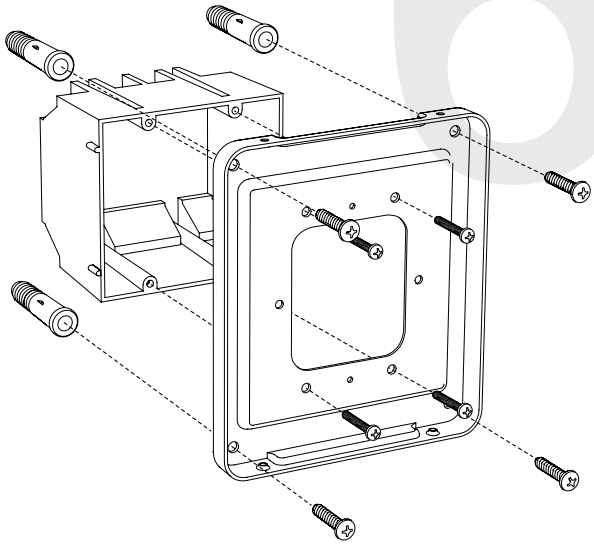

7) Thread any wiring through the mounting plate, and attach a grounding wire to the mounting plate using one of the larger centered holes and the #10-32x3/8 screw.

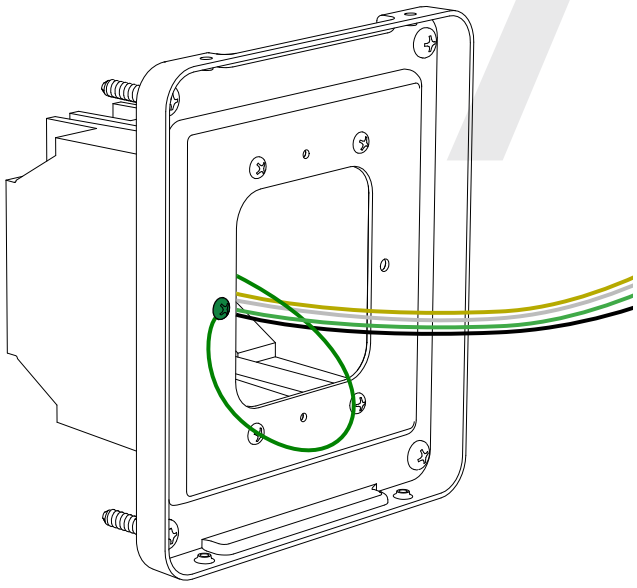

8) Detach the housing from the back of each clock. Do this by inserting a flat-blade screwdriver about 1/8 inch into each of the slot holes until the piece detaches. You may hear a snapping noise as the latches disengage.

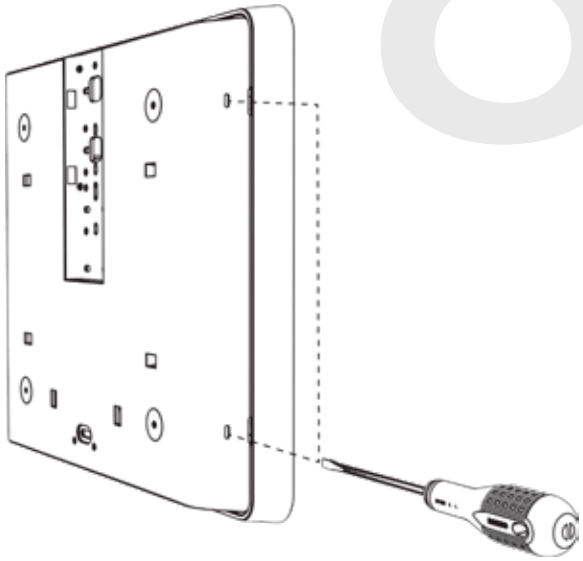

The Sapling Company, Inc.
670 Louis Drive
Warminster, PA 18974
USA

P. (+1) 215.322.6063
F. (+1) 215.322.8498
www.sapling-inc.com

Double Mount Installation - Square Clock

9) Release the mounting piece from the back of each housing by sliding it away from the center of the housing, then pulling it back and away from the housing. You will not need the mounting pieces later; either store them or throw them away at your discretion. **DO NOT THROW AWAY THE HOUSINGS.**

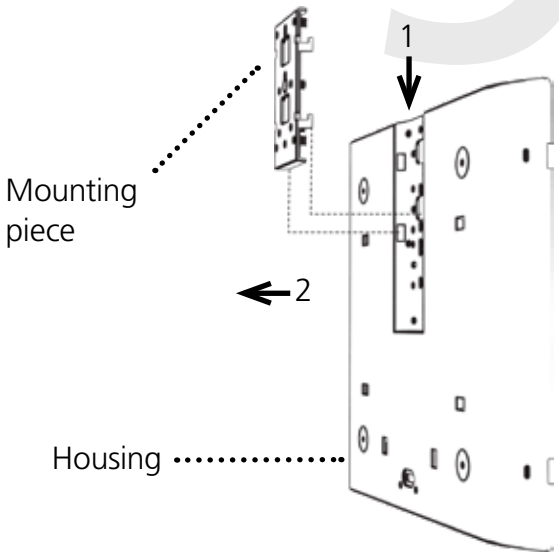

10) Attach both housings to the pole using four black 8-32x7/16 screws and four internal-tooth washers on each side.

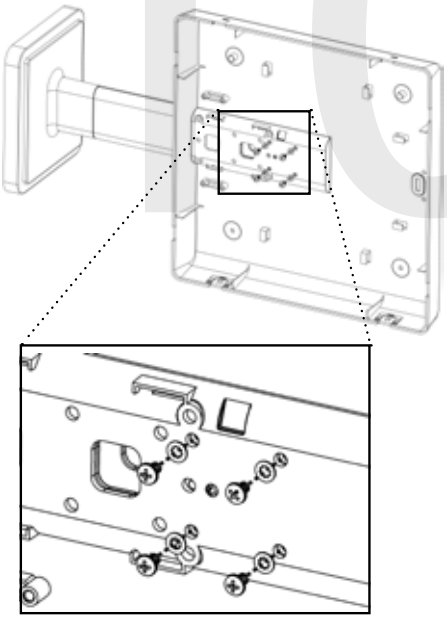

11) Attach the housings to each other using the four black M3.5-1.0x10 screws, two on each housing.

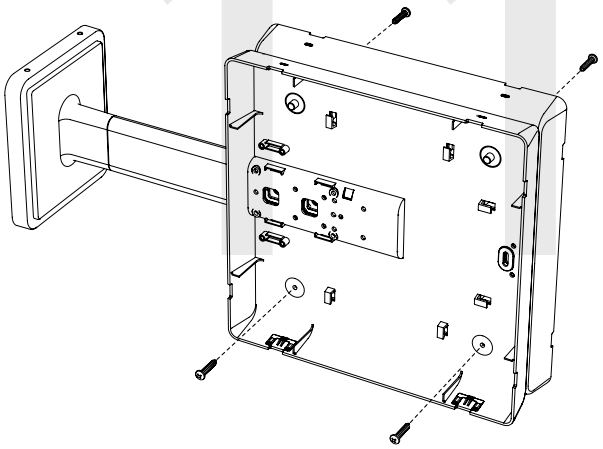

12) Thread at least fifteen inches (38.1cm) of wiring from the gang box through the bottom of the pole until each wire exits through the hole in the adapter.

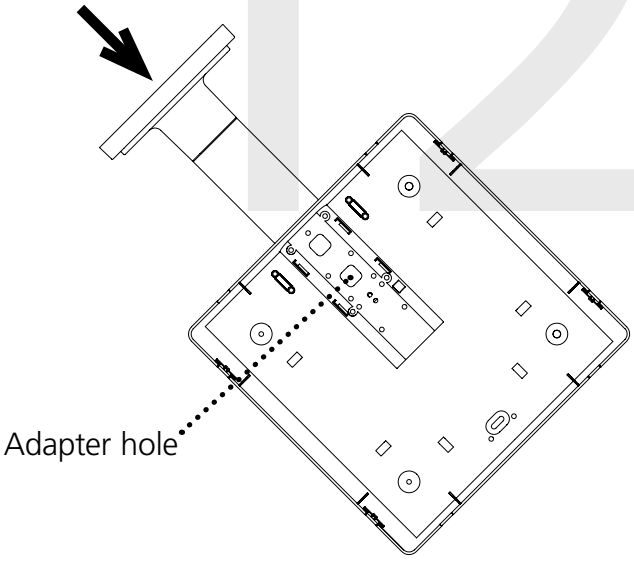

The Sapling Company, Inc.
670 Louis Drive
Warminster, PA 18974
USA

P. (+1) 215.322.6063
F. (+1) 215.322.8498
www.sapling-inc.com

Double Mount Installation - Square Clock

13) Attach the base of the pole to the mounting plate, so that the lip is on the top of the base, and the holes for the screws are on the bottom of the base. Hang the base on the mounting plate, attach the wires from the bottom of the pole to the wires in the gang box, then screw the other side of the base onto the mounting plate using the two black screws you set aside before.

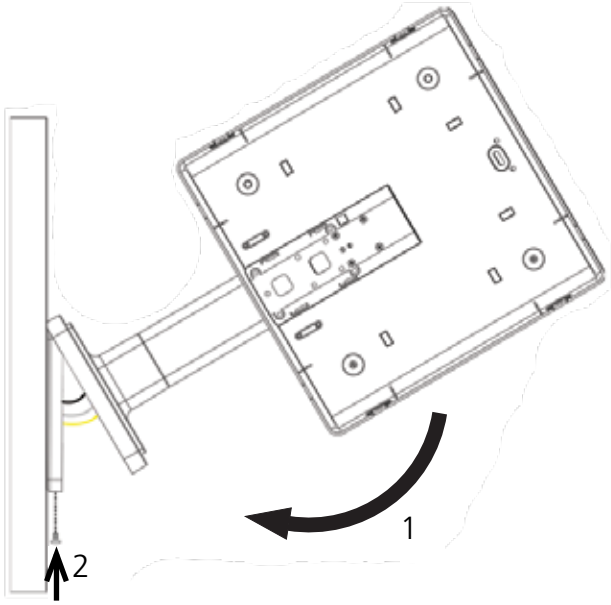

WALL

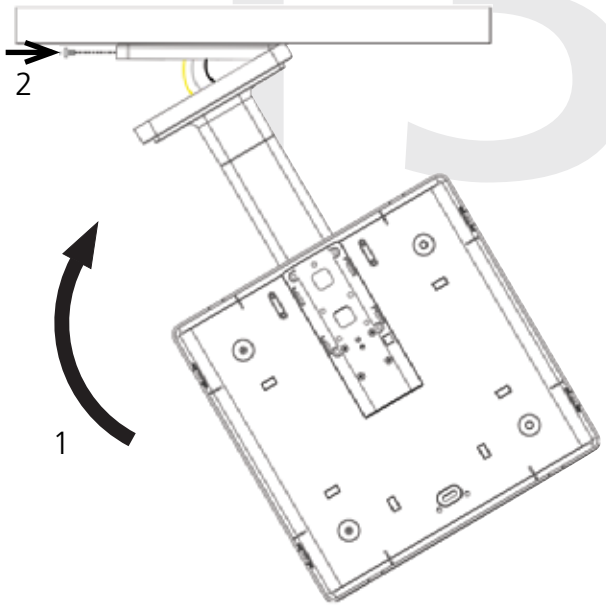

CEILING

14) Attach the power connectors to the wires you threaded through the poles. Consult the diagrams below for additional help, or see the sections of this manual labeled "3-Wire Synchronous (Sync-Wire) Communication Wiring Information" or "2-Wire Digital Communication Wiring Information" for additional details, depending on your system.

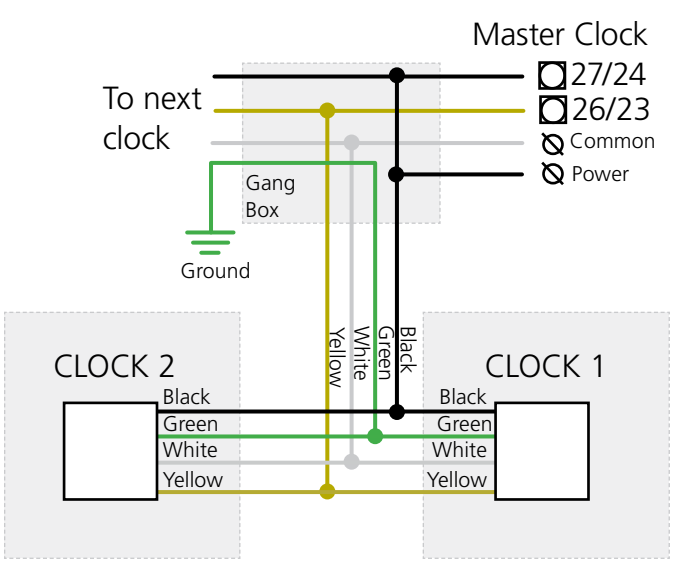

3-Wire Sync

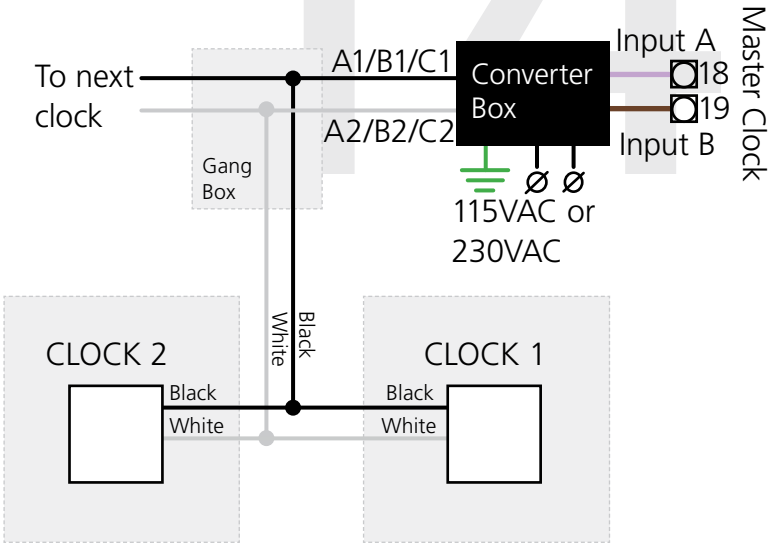

2-Wire Digital

The Sapling Company, Inc.
670 Louis Drive
Warminster, PA 18974
USA

P. (+1) 215.322.6063
F. (+1) 215.322.8498
www.sapling-inc.com

Double Mount Installation - Square Clock

15) **Remove the gearbox pins**, then attach a power connector to the ports on the side of each movement.

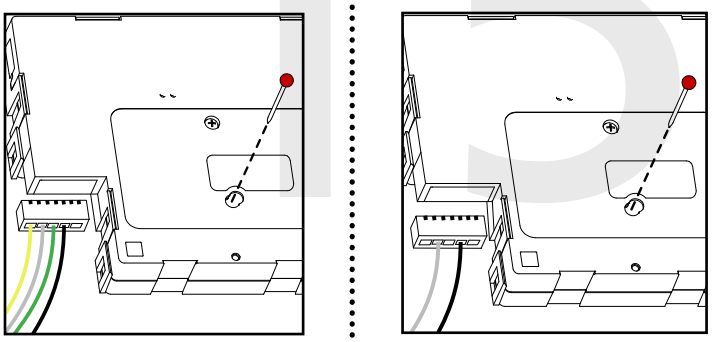

3-Wire Sync

Yellow
White
Green
Black

2-Wire Digital

White
Black

16) Loosen the strain relief by unscrewing the two screws. Slip any excess wiring through them, then tighten the strain relief by reinserting and tightening the screws.

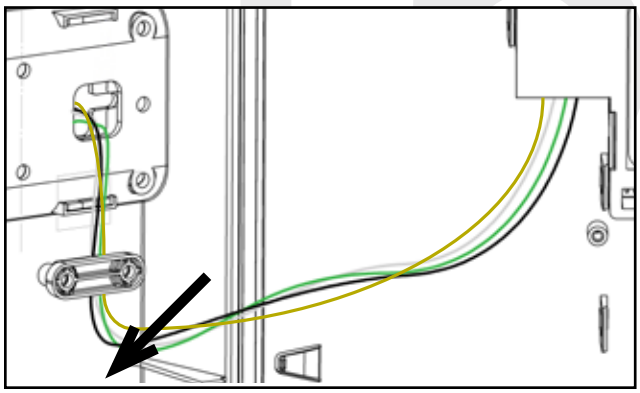

17) Slide both clocks back into their housings. You should hear a snapping noise as the latches reengage.

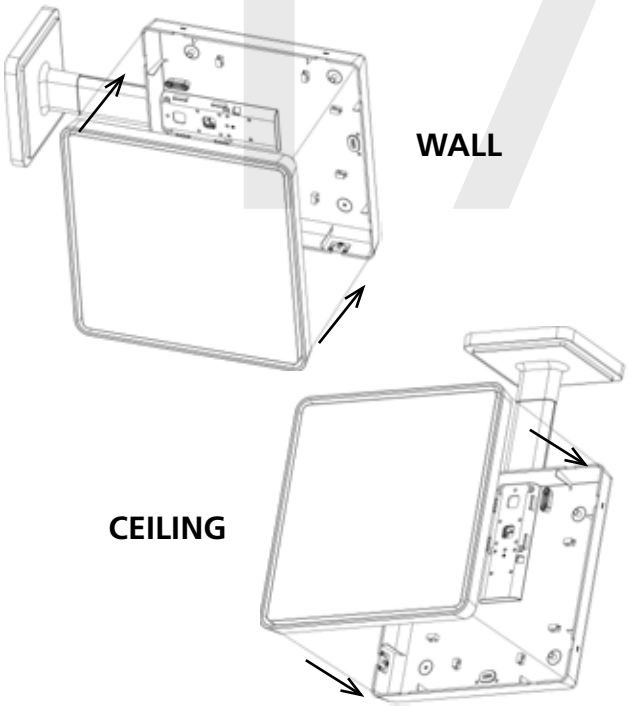

18) If you feel the need to detach the clock from the housing after the installation has been completed, use a flat-blade screwdriver on the four slots around the outside of the housing. You may hear a snapping noise as the internal latches disengage.

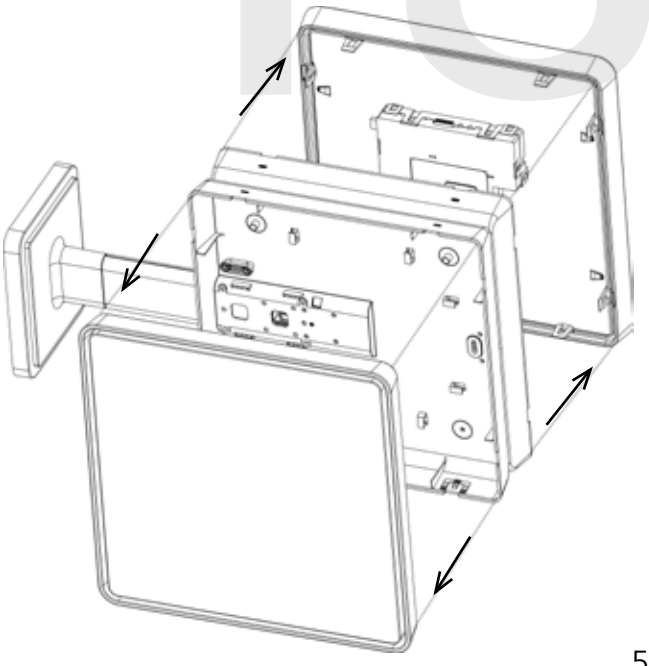

The Sapling Company, Inc.
670 Louis Drive
Warminster, PA 18974
USA

P. (+1) 215.322.6063
F. (+1) 215.322.8498
www.sapling-inc.com

Wiring Information - 2-Wire Digital Communication

SMA Series Master Clock

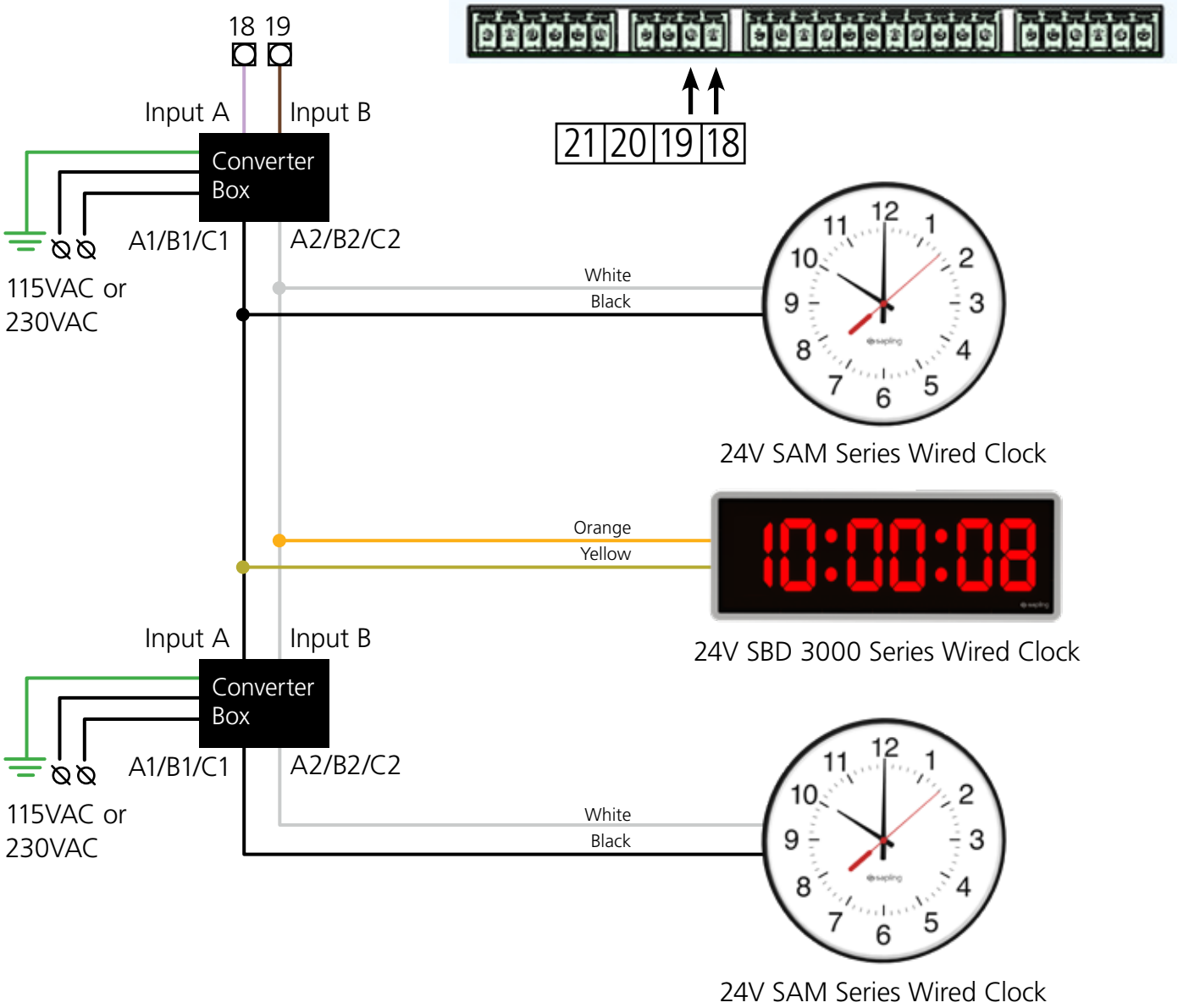

24V SAM Series Wired Clock

24V SBD 3000 Series Wired Clock

24V SAM Series Wired Clock

When replacing old converter boxes with new ones, the following values are equivalent:

OLD MODEL

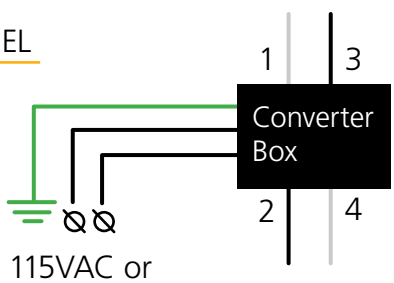

CURRENT MODEL

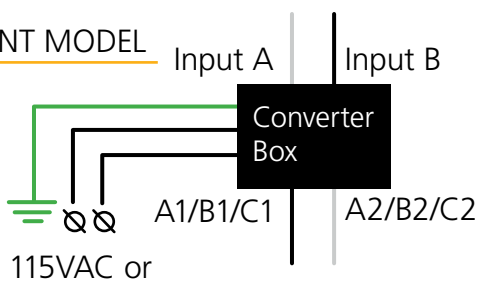

The Sapling Company, Inc.
670 Louis Drive
Warminster, PA 18974
USA

P. (+1) 215.322.6063
F. (+1) 215.322.8498
www.sapling-inc.com

Wiring Information - 3-Wire Synchronous (Sync-Wire) Communication 115/230VAC

SMA Series Master Clock

27 26 25 24 23 22 Clock Circuit 1

or*

27 26 25 24 23 22 Clock Circuit 2

* "or" means one pair of ports or the other. You cannot, for instance, use port 23 for reset and 27 for power, nor can you use 26 for reset and 24 for power. You must use the pair **24 AND 23** or the pair **26 AND 27**

Clock Circuit
27 26
or
24 23

Black
White
Neutral
Power
Reset

115VAC or
230VAC

Neutral — White
Power — Black
Reset — Yellow
Green
Ground

115/230VAC SAM Series Wired Clock

Neutral — J1-1
Reset — J1-2
Power — Black
Neutral — White
Green
Ground

Correction
Power

115/230VAC SBD 3300 Series Wired Clock

* Red & Blue Wires are NOT provided by Sapling

Neutral — White
Power — Black
Reset — Yellow
Green
Ground

115/230VAC SAM Series Wired Clock

The Sapling Company, Inc.
670 Louis Drive
Warminster, PA 18974
USA

P. (+1) 215.322.6063
F. (+1) 215.322.8498
www.sapling-inc.com

Wiring Information - 3-Wire Synchronous (Sync-Wire) Communication 24VAC

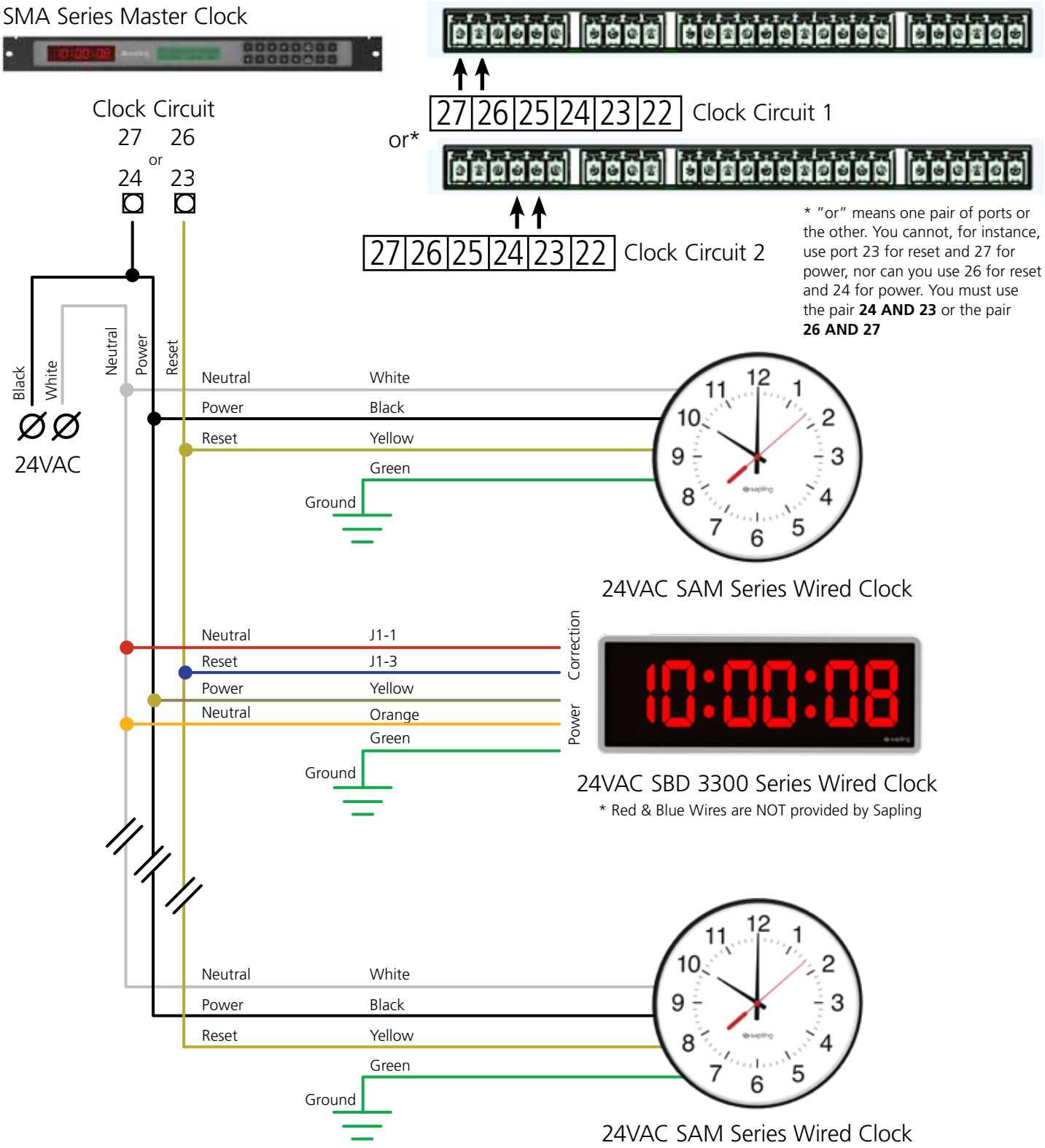

The Sapling Company, Inc.
670 Louis Drive
Warminster, PA 18974
USA

P. (+1) 215.322.6063
F. (+1) 215.322.8498
www.sapling-inc.com

Frequently Asked Questions

How do I know if the clock is receiving data?

Perform Diagnostic 2. See the section labeled "Diagnostic Test #2 - Comprehensive Test". The result should correspond to your system's synchronization settings.

Example 1: The two-wire digital system should result in the clock recieving communication within the last hour.

Example 2: Once-a-day sync systems may return a result of 11 hours or more, depending on when you conduct the test. In this case, the test should be conducted less than nine hours after the synchronization signal is sent.

What size utility/gang box is needed?

A standard single gang box is required for wall mounting a clock. However, if you are installing a double mount or flag-mount clock, then a standard double gang box is required.

Do I need to power up all the clocks at the same time?

No. Clocks that are added to the system after power up will begin running and wait for correction signals from the master clock. Sync-wire systems may take up to 24 hours to receive a correction signal.

Are the SAM Series analog clocks easily interchangeable with the SAA Series analog clocks?

Yes. The SAM Series was designed to be compatible with SAA clocks. Call tech support at (+1) 215.322.6063 ext. 2001 for wiring instructions.

Do I have to reset the clock if it suffers a power outage?

No. The clock will resume operation after the power outage, and will adjust to the correct time as soon as it receives a signal from the master clock.

What happens if I power the SAM before connecting the master clock?

The clock will begin to run, but the time displayed will be incorrect. As soon as signal wires from the master clock are connected and a synchronization signal is sent, the SAM will correct itself to display the correct time.

Can I manually set the time on the clock?

No. Furthermore, attempting to open the front crystal or moving the hands manually will damage the clock and void your warranty.

The Sapling Company, Inc.
670 Louis Drive
Warminster, PA 18974
USA

P. (+1) 215.322.6063
F. (+1) 215.322.8498
www.sapling-inc.com

Questions about Protocols

How do I set up the SAM to accept synchronization protocols from Rauland, Dukane, and other systems?

If you are receiving the protocol directly from the master clock, your SAM will automatically detect the sync-wire protocol being used when it first powers up; no action on your part is required.

If you wish to use Sapling's 2-wire digital protocol to carry synchronization data from a system that uses an unsupported protocol, a SMA 2000/3000 Series Master Clock must be used as an adapter between the two wiring systems. Consult the wiring guide in your SMA manual for more information.

How do I select which protocol I want my SAM to use?

When you power up the clock, your SAM will automatically recognize the protocol being used as soon as it receives data.

Can I change protocols if the system is running?

Yes. There are two ways of doing this:

1) Do nothing. Within three days of being plugged into the new protocol, the SAM clock will automatically notice the change in protocol and correct itself.

2) Reset the clock to manufacturer's default. Perform Diagnostic #3, then, after Diagnostic #3 is complete, power cycle the clock.

How do I check to confirm that the SAM is receiving the correct protocol?

Perform Diagnostic #1

How do I perform diagnostic tests on the clock system?

See the sections on the pages labeled "Diagnostic Test #1 - Protocol Verification", "Diagnostic Test #2 - Comprehensive Test", or "Diagnostic Test #3 - Manufacturing Default", depending on your needs.

I am adding a new clock into an existing SAA/SAM system. Do I have to set my entire system back to 12:00?

No. The new SAM clock will automatically correct itself upon receiving the data signal from the master clock.

The Sapling Company, Inc.
670 Louis Drive
Warminster, PA 18974
USA

P. (+1) 215.322.6063
F. (+1) 215.322.8498
www.sapling-inc.com

Troubleshooting

The clock is plugged into the power, but it is not running. What should I do?

a) Make sure that the movement's gearbox pin is removed.

b) Make sure that the ground wire is not touching other wires.

c) Make sure that the transformer is an isolated transformer if using a 24 volt model.

d) Measure the voltage between the power (black) wire and the neutral (white) wire. The voltage between the white and black wires should measure 105-126 volts AC in the 115 volt model, 207-253 volts AC in the 230 volt model, or 21.5-26.5 volts AC in the 24 volt model.

**Failure to follow instructions c and d can result in a blown fuse.*

The clock is not receiving a communication signal from the master clock. What should I do?

Follow these steps in order:

1) In order to check the last time the clock received communication from the master clock, perform Diagnostic #2. See the section labeled "Diagnostic Test #2 - Comprehensive Test"

2) Compare the time that the last signal was recieved to the parameters of your protocol. If the amount of time since the last signal was recieved is more than the amount of time since the clock last recieved time data, then there is a fault with the system.

3) Check your master clock and confirm that it is sending time data at the correct protocol and at the correct time. Consult your master clock manual for more information.

4) If your master clock has been properly configured, take the clock off the wall and test it at a location close to the master clock's signal output (or the converter box signal output, if a 2-Wire Digital System is being used). Use the master clock to send time data to the clocks.

If the clock corrects itself, then there was a problem with the wiring to the clock's original installation point, and the wiring must be repaired or replaced.

If the clock still fails to correct itself, contact tech support at (+1) 215.322.6063

I can hear data noise bleeding into the intercom line. What should I do?

Reduce the transmission rate from the master clock to once a minute. Please refer to the master clock manual for information on how to change the transmission rate.

The Sapling Company, Inc.
670 Louis Drive
Warminster, PA 18974
USA

P. (+1) 215.322.6063
F. (+1) 215.322.8498
www.sapling-inc.com

Diagnostic Test #1 - Protocol Verification (Metal Only)

The purpose of Diagnostic #1 is to tell the user which protocol the master clock is using to communicate with the secondary clock.

Diagnostic #1 may be enabled by pressing the diagnostic button for one second. If the SRM clock is performing this diagnostic, the Diagnostic LED will flash green once every three seconds. It will continue to flash once every three seconds until the diagnostic is complete. The clock will confirm that the diagnostic is complete when the LED shines a different color.

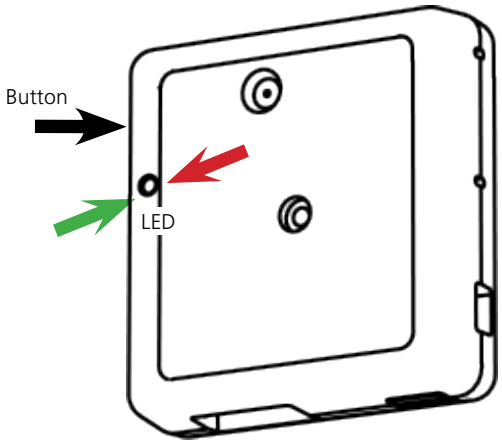

If the LED is shining a solid green:

The Diagnostic was completed successfully. The second hand on the clock will move to a specific second on the dial. Each second corresponds to a particular protocol and polarity:

Second Hand Position	Protocol and Polarity Detected
2 seconds	2-Wire Digital Communication, Polarity 1
4 seconds	2-Wire Digital Communication, Polarity 2
6 seconds	3-Wire Digital Communication, Polarity 1
8 seconds	3-Wire Digital Communication, Polarity 2
10 seconds	RS485 Communication, Polarity 1
12 seconds	RS485 Communication, Polarity 2
14 seconds	59 Minute Correction, Correct Polarity
16 seconds	59 Minute Correction, Reverse Polarity
18 seconds	58 Minute Correction, Correct Polarity
20 seconds	58 Minute Correction, Reverse Polarity
22 seconds	National Time/Rauland Correction, Correct Polarity
24 seconds	National Time/Rauland Correction, Reverse Polarity

The second hand will remain on this number for 3 minutes, and then the clock will revert to displaying the accurate time.

If the LED is flashing red:

A comprehensive test is required. Please perform Diagnostic #2

The Sapling Company, Inc.
670 Louis Drive
Warminster, PA 18974
USA

P. (+1) 215.322.6063
F. (+1) 215.322.8498
www.sapling-inc.com

Diagnostic Test #1 - Protocol Verification (All Other Clocks)

The purpose of Diagnostic #1 is to tell the user which protocol the master clock is using to communicate with the secondary clock.

Diagnostic #1 may be enabled by pressing the diagnostic button once. If the SAM clock is performing this diagnostic, the Diagnostic LED will flash green once every three seconds. It will continue to flash once every three seconds until the diagnostic is complete. The clock will confirm that the diagnostic is complete when the LED shines a different color.

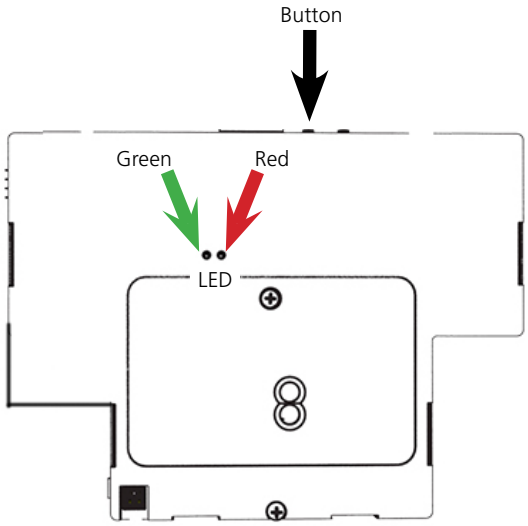

If the LED is shining a solid green:

The Diagnostic was completed successfully. The second hand on the SAM clock will move to a specific second on the dial. Each second corresponds to a particular protocol and polarity:

Second Hand Position	Protocol and Polarity Detected
2 seconds	2-Wire Digital Communication, Polarity 1
4 seconds	2-Wire Digital Communication, Polarity 2
6 seconds	3-Wire Digital Communication, Polarity 1
8 seconds	3-Wire Digital Communication, Polarity 2
10 seconds	RS485 Communication, Polarity 1
12 seconds	RS485 Communication, Polarity 2
14 seconds	59 Minute Correction, Correct Polarity
16 seconds	59 Minute Correction, Reverse Polarity
18 seconds	58 Minute Correction, Correct Polarity
20 seconds	58 Minute Correction, Reverse Polarity
22 seconds	National Time/Rauland Correction, Correct Polarity
24 seconds	National Time/Rauland Correction, Reverse Polarity

The second hand will remain on this number for 3 minutes, and then the clock will revert to displaying the accurate time.

If the LED is flashing red:

A comprehensive test is required. Please perform Diagnostic #2

The Sapling Company, Inc.
670 Louis Drive
Warminster, PA 18974
USA

P. (+1) 215.322.6063
F. (+1) 215.322.8498
www.sapling-inc.com

Diagnostic Test #2 - Comprehensive Test (Metal Only)

The purpose of Diagnostic #2 is to test the Movement gearbox and electrical components of your clock.

Diagnostic #2 may be enabled by holding down the diagnostic button for three seconds. If the SAM clock is performing this diagnostic, then a green LED on the movement will flash twice every three seconds. It will continue to flash twice every three seconds until the diagnostic is complete. The clock will confirm that the diagnostic is complete when the LED shines a different color:

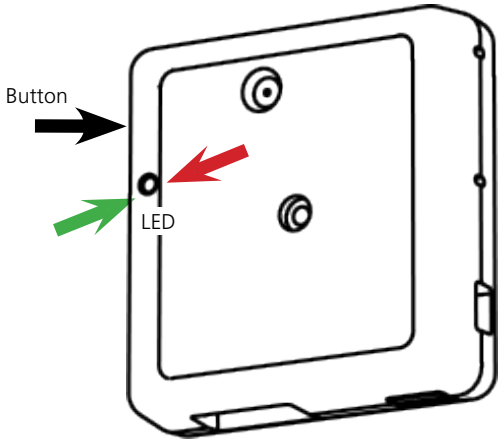

If the LED is shining a solid green:

The second hand will display the protocol and polarity that was detected. See the table on the previous page for details.

The minute hand will display the software version number.

If the LED is flashing red:

The hour hand will display how much time has passed since the clock last received a communication signal:

Hour Hand Position	Time Since Clock Last Recieved Communication
12	Clock received communication within the last hour.
1	Clock received communication between 1 and 2 hours ago.
2	Clock received communication between 2 and 3 hours ago.
3	Clock received communication between 3 and 4 hours ago.
4	Clock received communication between 4 and 5 hours ago.
5	Clock received communication between 5 and 6 hours ago.
6	Clock received communication between 6 and 7 hours ago.
7	Clock received communication between 7 and 8 hours ago.
8	Clock received communication between 8 and 9 hours ago.
9	Clock received communication between 9 and 10 hours ago.
10	Clock received communication between 10 and 11 hours ago.
11	Clock received communication more than 11 hours ago. --May signify a manufacturer default.

The clock hands will remain on these numbers for three minutes, and then the clock will revert to displaying the accurate time.

The Sapling Company, Inc.
670 Louis Drive
Warminster, PA 18974
USA

P. (+1) 215.322.6063
F. (+1) 215.322.8498
www.sapling-inc.com

Diagnostic Test #2 - Comprehensive Test (All Other Clocks)

The purpose of Diagnostic #2 is to test the Movement gearbox and electrical components of your SAM clock.

Diagnostic #2 may be enabled by pressing the diagnostic button twice. If the SAM clock is performing this diagnostic, then a green LED on the movement will flash twice every three seconds. It will continue to flash twice every three seconds until the diagnostic is complete.

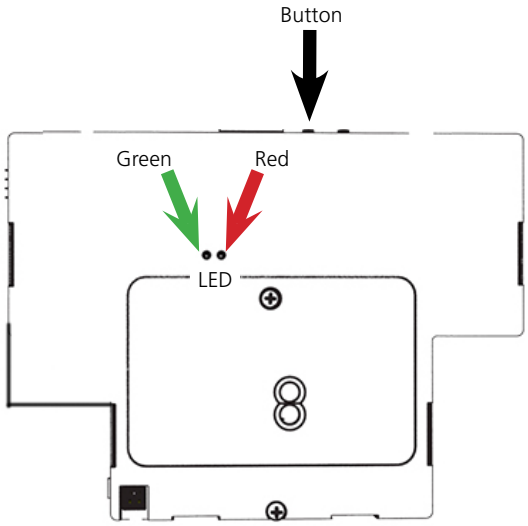

If the LED is lit a solid green:

The second hand will display the protocol and polarity that was detected. See the table on the previous page for details.

The minute hand will display the software version number.

If the LED is flashing red:

The hour hand will display how much time has passed since the clock last received a communication signal:

Hour Hand Position	Time Since Clock Last Recieved Communication
12	Clock received communication within the last hour.
1	Clock received communication between 1 and 2 hours ago.
2	Clock received communication between 2 and 3 hours ago.
3	Clock received communication between 3 and 4 hours ago.
4	Clock received communication between 4 and 5 hours ago.
5	Clock received communication between 5 and 6 hours ago.
6	Clock received communication between 6 and 7 hours ago.
7	Clock received communication between 7 and 8 hours ago.
8	Clock received communication between 8 and 9 hours ago.
9	Clock received communication between 9 and 10 hours ago.
10	Clock received communication between 10 and 11 hours ago.
11	Clock received communication more than 11 hours ago.
	--May signify a manufacturer default.

The clock hands will remain on these numbers for 3 minutes, and then the clock will revert to displaying the accurate time.

The Sapling Company, Inc.
670 Louis Drive
Warminster, PA 18974
USA

P. (+1) 215.322.6063
F. (+1) 215.322.8498
www.sapling-inc.com

Diagnostic Test #3 - Manufacturing Default (Metal Only)

The purpose of Diagnostic #3 is to bring the clock back to 12:00:00 and reset to the manufacturer's default.

Diagnostic #3 may be enabled by holding down the diagnostic button for five seconds. If the SAM clock is performing this diagnostic, then a green LED on the back will flash three times with a five second break between each flash. The LED will continue to flash green until the diagnostic is complete. The clock will confirm that the diagnostic is complete when the LED shines a different color.

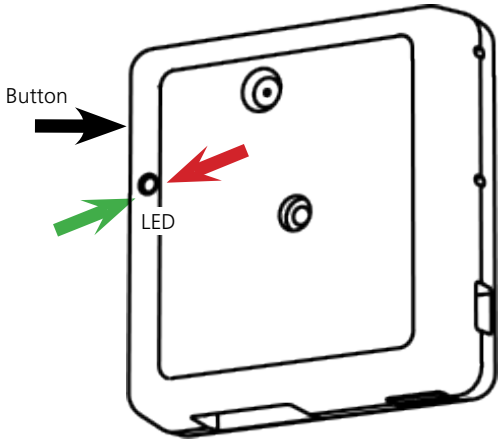

If the LED is flashing red:

Number of Red Flashes	Error Message
1,2	Error detected in second hand. Confirm that hands are not hitting each other, then repeat the test.
3,4,5	Error detected in the minute or hour hand. Confirm that hands are not hitting each other, then repeat the test.
6,7,8	Call tech support. (+1) 215.322.6063

If the LED is a solid green and all of the clock hands are pointing to 12, the test was completed successfully.

At the end of Diagnostic three, the clock hands will be set to 12:00:00. The clock will not resume normal operation until the power has been recycled.

The Sapling Company, Inc.
670 Louis Drive
Warminster, PA 18974
USA

P. (+1) 215.322.6063
F. (+1) 215.322.8498
www.sapling-inc.com

Diagnostic Test #3 - Manufacturing Default (All Other Clocks)

The purpose of Diagnostic #3 is to bring the clock back to 12:00:00 and reset to the manufacturer's default.

Diagnostic #3 may be enabled by pressing the diagnostic button three times. If the SAM clock is performing this diagnostic, then a green LED on the back will flash three times with a five second break between each flash. The LED will continue to flash green until the diagnostic is complete.

If the LED is flashing red:

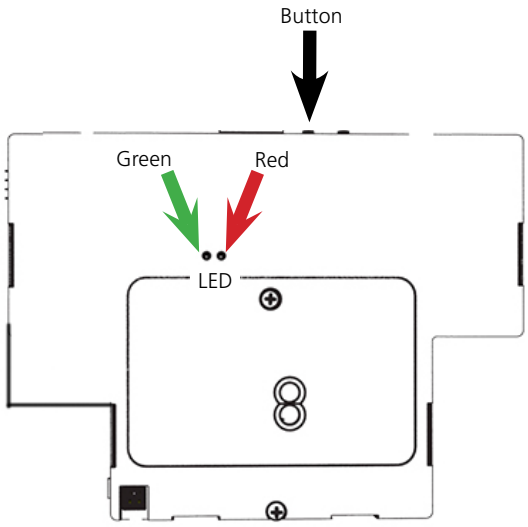

Number of Red Flashes	Error Message
1,2	Error detected in second hand. Confirm that hands are not hitting each other, then repeat the test.
3,4,5	Error detected in the minute or hour hand. Confirm that hands are not hitting each other, then repeat the test.
6,7,8	Call tech support. (+1) 215.322.6063

If the LED is a solid green and all of the clock hands are pointing to 12, the test was completed successfully.

At the end of Diagnostic three, the clock hands will be set to 12:00:00. It will not resume normal operation until power to the clock has been turned off and on again.

The Sapling Company, Inc.
670 Louis Drive
Warminster, PA 18974
USA

P. (+1) 215.322.6063
F. (+1) 215.322.8498
www.sapling-inc.com

Warranty

Sapling Limited Warranty and Disclaimer

The Sapling Company, Inc. warrants only that at the time of delivery and for a period of 24 calendar months after delivery or the period stated in this invoice, if different, the Goods shall be free of defects in workmanship and materials, PROVIDED that this warranty shall not apply:

To damage caused by Buyer's or any third party's act, default or misuse of the Goods or by failure to follow any instructions supplied with the Goods.

Where the Goods have been used in connection with or incorporated into equipment or materials the specification of which has not been approved in writing by The Sapling Company, Inc.;

To Goods which are altered, modified or repaired in any place other than a Sapling Company, Inc. factory or by persons not expressly authorized or approved in writing by The Sapling Company, Inc.

THE FOREGOING WARRANTY IS EXCLUSIVE AND IN LIEU OF ALL OTHER WARRANTIES WITH RESPECT TO GOODS DELIVERED UNDER THIS CONTRACT, WHETHER EXPRESS OR IMPLIED, INCLUDING WITHOUT LIMITATION, ANY IMPLIED WARRANTY OF MERCHANTABILITY OR FITNESS FOR A PARTICULAR PURPOSE. The foregoing warranty runs only to Buyer. There are no oral or written promises, representations or warranties collateral to or affecting this contract. Representatives of The Sapling Company, Inc. may have made oral statements about products described in this contract. Such statements do not constitute warranties, shall not be relied on by Buyer and are not part of the contract.

Note: An extended 5 year (60 month) warranty is also available at the time of the system purchase with a surcharge.